TYPICAL SECTIONS

① SEE CROSS SECTIONS FOR SLOPES OUTSIDE THE LIMITS OF THE SHOULDER.

② CONSTRUCT TURF REINFORCEMENT MAT 4 WITHIN THE LIMITS SHOWN ON THE TYPICAL SECTION, AND BETWEEN THE STATIONS SHOWN ON THE PLAN SHEETS, TO PROTECT THE LEFT ROADWAY EMBANKMENT FROM EROSION DURING OVERTOPPING FLOOD EVENTS. SEE DITCH CHARTS ON THE PLAN SHEETS FOR THE DEPTH DIMENSION "D". CONSTRUCT ACCORDING TO TURF REINFORCED MAT SHOWN ON THE DETAIL SHEETS. CONSTRUCT ANCHOR TRENCHES AT POINTS 5 , ENSURING OVERLAP LAP IS IN THE DIRECTION OF OVERTOPPING FLOW.

③ THE FOLLOWING ITEMS ARE INCIDENTAL TO PERFORATED PIPE EDGE DRAIN INSTALLATION (SEE KYTC SPECS-SECT. 704): TRENCH EXCAVATION, MATERIALS FOR BEDDING AND BACKFILL, AND GEOTEXTILE FABRIC FOR WRAPPING PERFORATED PIPE OR WRAPPING COARSE AGGREGATE BACKFILL

LITTLE STURGEON CREEK RD PAVEMENT DESIGN

1.50" CL2 ASPH SURF 0.38D PG64-22
3.00" CL2 ASPH BASE 1.00D PG64-22
3.00" CL2 ASPH BASE 1.00D PG64-22
4.00" CRUSHED STONE BASE
12.00" CRUSHED AGGREGATE SIZE NO 2

ENTRANCE PAVEMENT DESIGN

1.50" CL2 ASPH SURF 0.38D PG64-22

3.00" CL2 ASPH BASE 1.00D PG64-22
4.00" CRUSHED STONE BASE

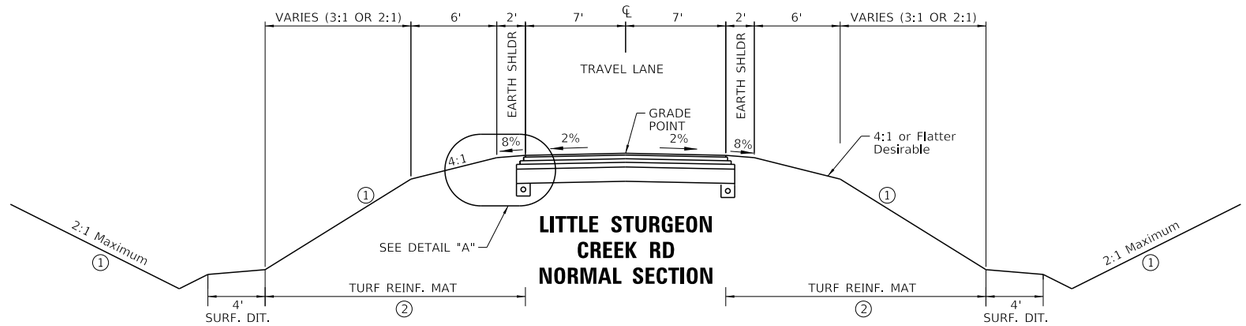

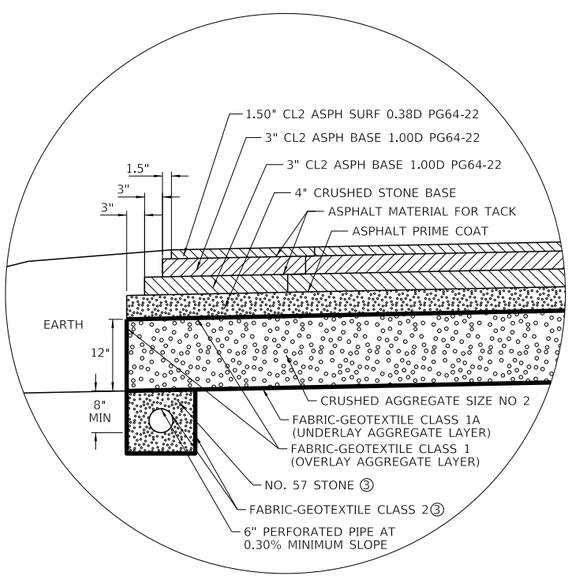

DETAIL "A"

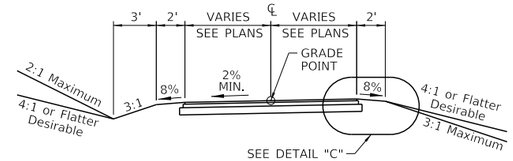

ENTRANCE

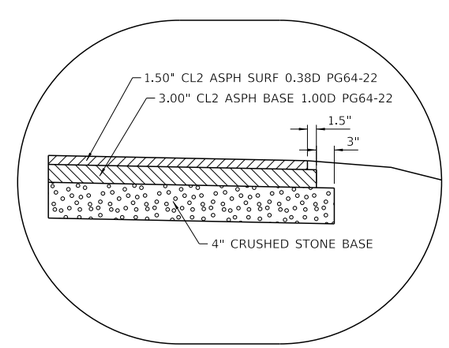

DETAIL "C"

Ⓒ SLOPES VARY - SEE CROSS SECTIONS FOR DETAILS

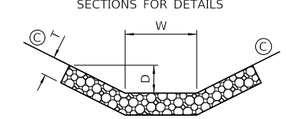

D = DEPTH TO PROTECT
T = THICKNESS (ROCK LINING)
W = WIDTH

DITCH LINING DETAIL

COMMONWEALTH OF KENTUCKY
DEPARTMENT OF HIGHWAYS
TEAM KENTUCKY

DRAWING TITLE: LITTLE STURGEON CREEK TYPICAL SECTION

ITEM NO. XX-XXXX.XX
COUNTY OF OWSLEY
SHEET NO. R2

Corporate Limits
County Line
Easement
Fence COA
Mineral Parcel
Property Line
Right of Way Line
All Overhead Utility Lines
Cable Underground Electric With Quality Levels
Duct Underground Electric With Quality Levels
Cable Underground Fiber With Quality Levels
Cable Underground Telephone With Quality Levels
Duct Underground Telephone With Quality Levels
Cable Underground TV With Quality Levels
Main Gas With Quality Levels
Main Water With Quality Levels
Main Water Greater Than 12 With Quality Levels
Sewer Sanitary With Quality Levels
Sewer Sanitary Force Main With Quality Levels
Sewer Storm WIth Quality Levels
Multi Utility Bank Quality Levels
Oil Line Quality Levels
Steam Line Quality Levels
Cable Underground Electric Marker
Duct Underground Electric Marker
Cable Underground Fiber Marker
Cable Underground Telephone Marker
Duct Underground Telephone Marker
Cable Underground TV Marker
Main Gas Marker

Main Water Marker
Main Water Greater Than 12 Marker
Sewer Sanitary Marker
Sewer Sanitary Force Main Marker
Sewer Storm Marker
Multi Utility Bank Marker
Oil Line Marker
Steam Line Marker
Cable Guardrail
Ditch
Edge of Water
Fence Hedge
Fence
Flow Line/Thalweg/ Int. Stream or Ditch
Guardrail
Railroad
Shrub Line
Sink Hole
Tree Line
Wall (WSM or DSM)
Blue Line Stream
Lakes and Ponds
Regulated Floodway
RDZ Line
ADA Ramp
Anchor Pole
Benchmark
Bike Lane Symbol
Bollard
Centerline
Centerline Stationing
Control Monument
Control Point
Core Hole
Crash Cushion TY 6 D
Crash Cushion TY 6 A
Crash Cushion TY 9A

Crash Cushion TY 9
Cross Notch
Curb Box Inlet
Curb Notch
Combination Pole
Delineator Post
Drop Box
Existing Spring
Electric Manhole
Electric Meter
Electric Pedestal
Electric Pole
Electric Junction Box
Fire Hydrant
Flag Pole
Force Main Sewer Valve
Fuel Tank Inlet
Fuel Tank Vent
Gas Meter
Gas Monitoring Well
Gas Valve
Gas Vent
Gas Well
Guidewires & Anchors
Headstone
Interstate Shield
Iron Pin
Light Pole
Low Wire
Mag Nail
Mailbox
Manhole
Mile Marker Post
Mineral Parcel
Misc Location Point
Monitoring Well
Parking Meter
Pedestrian Signal
Pins/Pipes
PK Nail

Point (Misc)
Pole
Pole (Light)
Post
Power Pole
Quarry
Random (Ground Shot)
Railroad Mile Marker
Railroad Spike
Right of Way Marker
Right of Way Monument
RR Traffic Signal Pole
RW Parcel
Sanitary Cleanout
Sanitary Manhole
Satelite Dish
Septic Tank Cleanout
Service Pole
Sewer Air Release Valve
Shrub
Sign
Sign Post (Single)
Sign with 2 posts
Sign group (4)
Station Stamp
Storm Manhole
Stub Power
Stub Telephone
Survey Cross Notch
Survey Curb Notch
Survey Nail
Survey Spike
Survey Stone Marker
Swamp
Telephone Booth
Telephone Junction Box
Telephone Line Overhead
Telephone Manhole

Telephone Pedestal
Telephone Pole
Temporary Benchmark
Traffic Light
Traffic Signal Control Box
Traffic Signal Junction Box
Traffic Signal Pole
Traverse Point
Tree
TV Junction Box
Utility Pole
Underground Storage Tank
Utility Test Hole
Water Line Marker
Water Meter
Water Spigot
Water Valve
Water Well
Yard Light
Yard Sprinkler
Yard Sprinkler Water Valve

Utility Owners

Utility #1
JACKSON ENERGY COOPERATIVE CORPORATION - ELECTRIC
115 JACKSON ENERGY LANE
McKee KY 40447
CONTACT - JASON MONTGOMERY
606-872-3903

Utility #2
PEOPLES RURAL TELEPHONE COOPERATIVE CORPORATION, INC. - TELEPHONE
P.O. BOX 159
1080 MAIN STREET
SOUTH McKee KY 40447
CONTACT - JOHN RENNER
606-287-7101

COMMONWEALTH OF KENTUCKY
DEPARTMENT OF HIGHWAYS
TEAM KENTUCKY Transportation Cabinet

DRAWING TITLE: LEGEND & UTILITIES

ITEM NO. XX-XXXX.XX
COUNTY OF OWSLEY
SHEET NO. R3

NOTE:
DIVISION OF WATER CATEGORIZES STURGEON CREEK AS A KENTUCKY SPECIAL USE WATERS. SPECIAL CONDITIONS REQUIRED FOR INDIVIDUAL WATER QUALITY CERTIFICATION.

SEE PS&E ENVIRONMENTAL PACKAGE FOR DETAILS.

DITCH CONSTRUCTION "MAINLINE" --- LEFT					
STA. TO STA.	TYPE/SIZE	CHANNEL LINING			
		TYPE	DEPTH	THICKNESS	QUANTITY
49+00 - 49+61	SPCL. V DT	CL III	1.3 FT	2.0 FT	54 TON
53+00 - 53+25	SPCL. V DT	CL III	1.3 FT	2.0 FT	289 TON

CHANNEL LINING CLASS III :
ESTIMATED AT 0.5 TON PER SQ. YD PER FOOT OF THICKNESS.

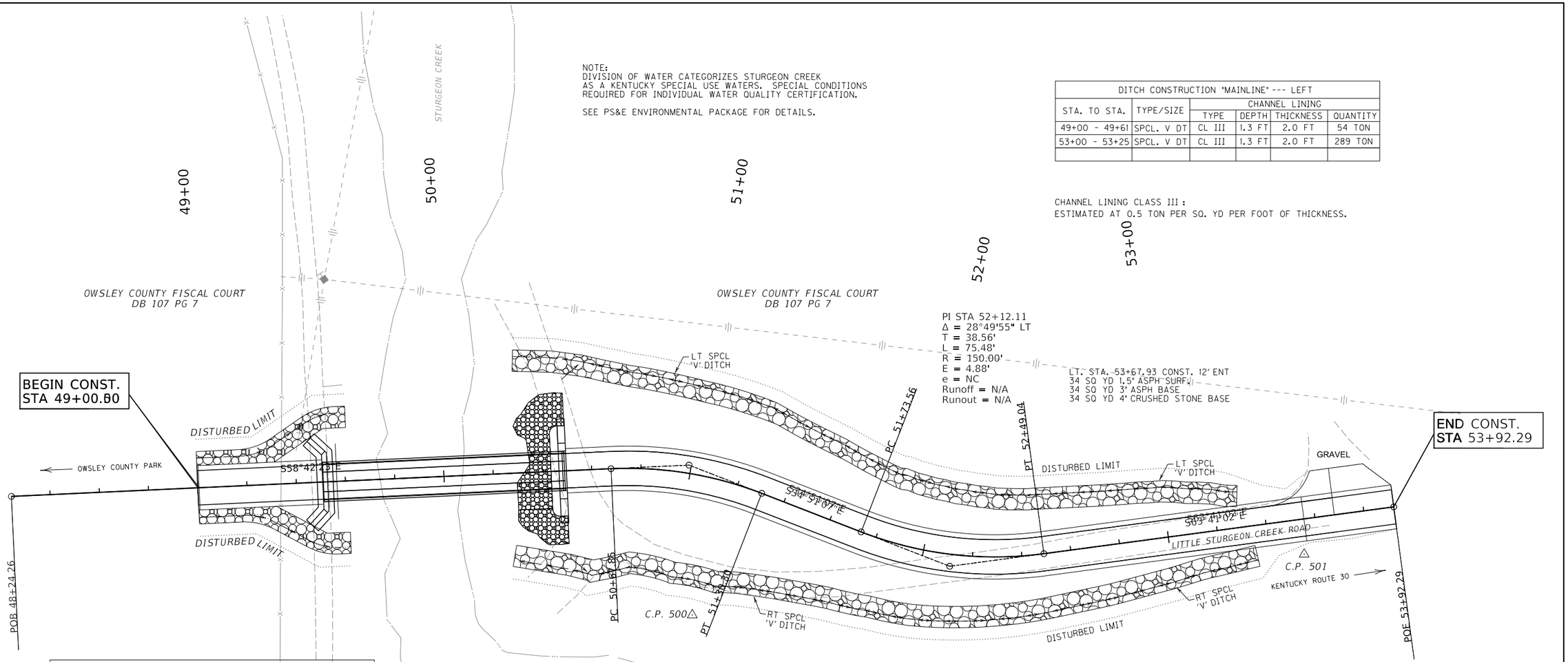

EMBANKMENT SLOPE PROTECTION (SEE CROSS-SECTIONS)			
STA. TO STA.	TURF REIN. MAT. (23277ENIIF)		
	TYPE	THICKNESS	QUANTITY
LT. STA. 49+31 - 49+50	TYPE 4		16 SQ YD
LT. STA. 50+49 - 53+25	TYPE 4		525 SQ YD
RT. STA. 49+31 - 49+50	TYPE 4		16 SQ YD
RT. STA. 50+49 - 53+25	TYPE 4		515 SQ YD

BEGIN BRIDGE STA. 49+51.00
END BRIDGE STA. 50+49.00
0° SKEWED ONE-SPAN BRIDGE (98.0')

•SEE BRIDGE PLAN FOR DETAILS

PI STA 50+99.54
Δ = 23°51'15" RT
T = 31.68'
L = 62.45'
R = 150.00'
E = 3.31'
e = NC
Runoff = N/A
Runout = N/A

LITTLE STURGEON CREEK

STURGEON CREEK

DITCH CONSTRUCTION "MAINLINE" --- RIGHT					
STA. TO STA.	TYPE/SIZE	CHANNEL LINING			
		TYPE	DEPTH	THICKNESS	QUANTITY
49+00 - 49+61	SPCL. V DT	CL III	1.3 FT	2.0 FT	54 TON
50+27 - 53+25	SPCL. V DT	CL III	1.3 FT	2.0 FT	303 TON

CHANNEL LINING CLASS III :
ESTIMATED AT 0.5 TON PER SQ. YD PER FOOT OF THICKNESS.

COMMONWEALTH OF KENTUCKY
DEPARTMENT OF HIGHWAYS

TEAM KENTUCKY

DRAWING TITLE: PLAN SHEET

HORIZONTAL SCALE
SCALE: 1"=20'

0' XX' XXX' XXX'

STA. 48+23.76 TO STA. 54+23.76

ITEM NO. XX-XXXX.XX
COUNTY OF OWSLEY
SHEET NO. R4

OpenRoads Designer v23.00.01.11 USER: Min.Jiang FILE NAME: C:\PWWORK\MIN.JIANG\D2405329\PLAN SHEET.DGN

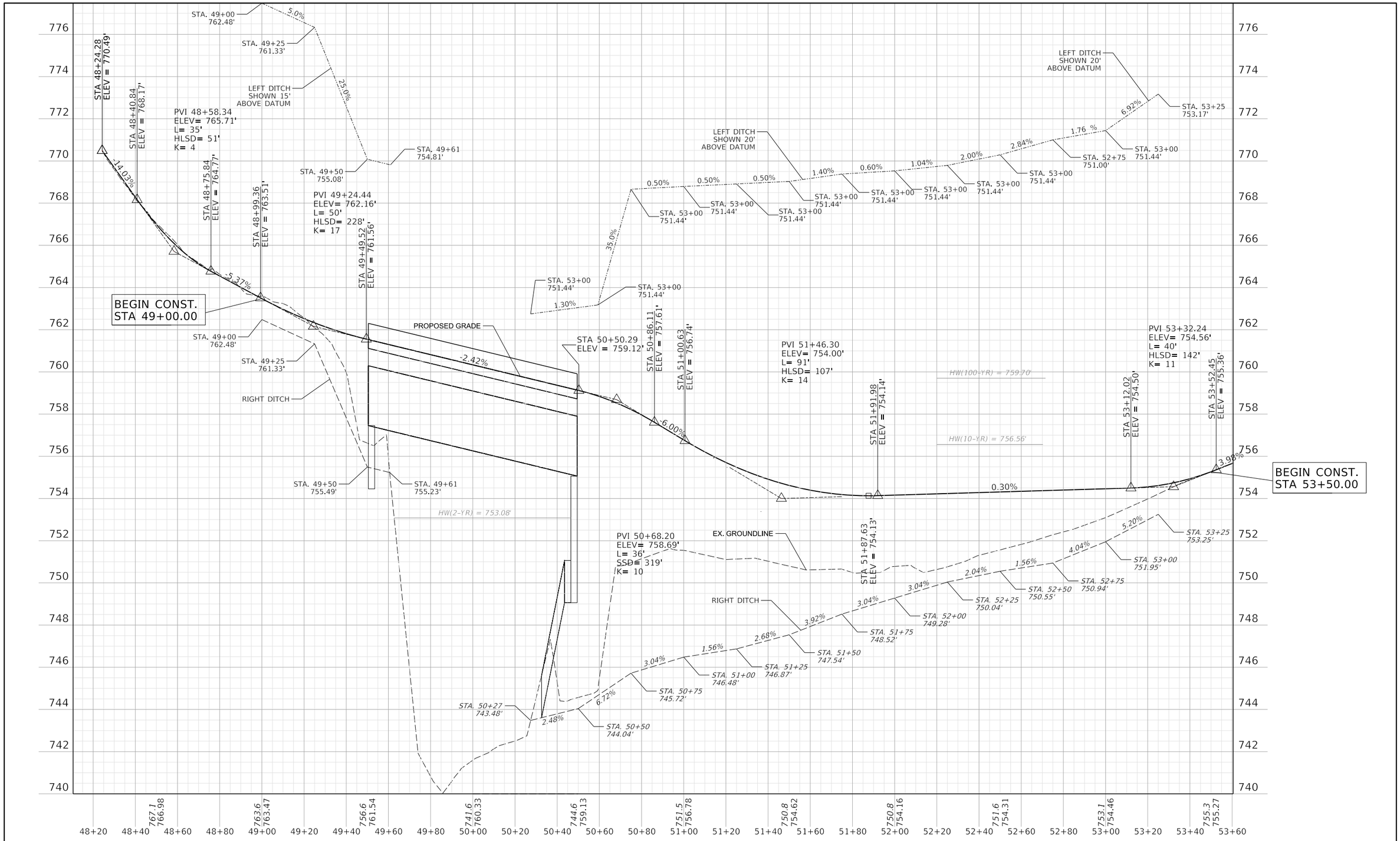

COMMONWEALTH OF KENTUCKY
DEPARTMENT OF HIGHWAYS

TEAM KENTUCKY

DRAWING TITLE: PROFILE SHEET

HORIZONTAL SCALE
SCALE: 1"=50'

VERTICAL SCALE
SCALE: 1" = 5'

0' XX' XXX' XXX'

STA. 48+10.50 TO STA. 53+60.50

ITEM NO. —

COUNTY OF OWSLEY

SHEET NO. R5

OpenRoads Designer v23.00.01.11

USER: Min.Jiang

FILE NAME: C:\PWWORK\MIN.JIANG\D2405329\PROFILE SHEET.DGN

HORIZONTAL COORDINATE SYSTEM

Coordinates for Horizontal survey control were obtained from GPS-RTK methods utilizing the Kentucky CORS/VRS Network. Horizontal Coordinates are in U.S. Survey Feet.

Coordinates are based on the Kentucky State Plane Coordinate System, Single Zone (KY Zone 1600) and are in U.S. Survey Feet.

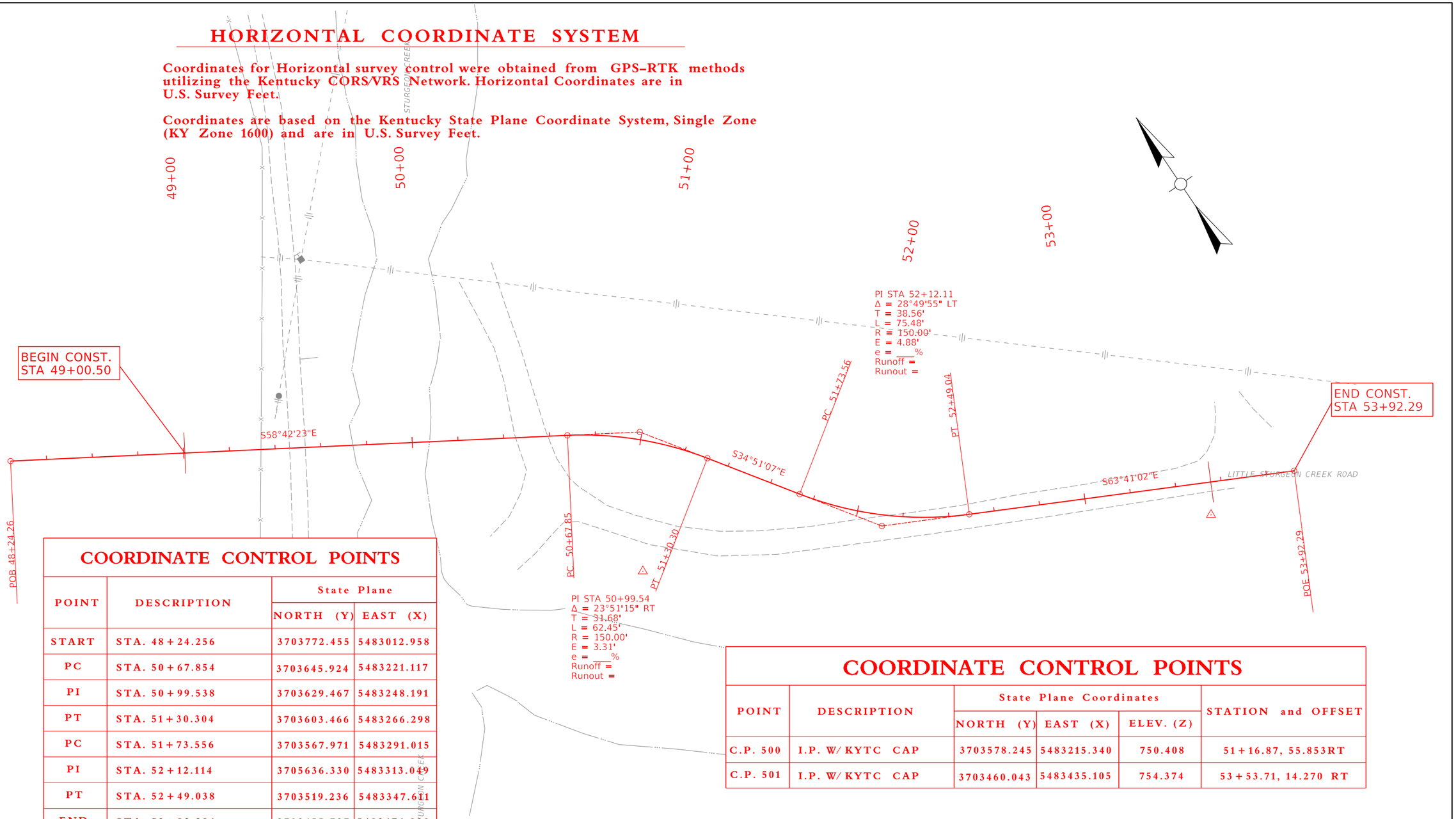

COORDINATE CONTROL POINTS

POINT	DESCRIPTION	State Plane	
		NORTH (Y)	EAST (X)
START	STA. 48+24.256	3703772.455	5483012.958
PC	STA. 50+67.854	3703645.924	5483221.117
PI	STA. 50+99.538	3703629.467	5483248.191
PT	STA. 51+30.304	3703603.466	5483266.298
PC	STA. 51+73.556	3703567.971	5483291.015
PI	STA. 52+12.114	3705636.330	5483313.049
PT	STA. 52+49.038	3703519.236	5483347.611
END	STA. 53+92.294	3703455.727	5483476.020

COORDINATE CONTROL POINTS

POINT	DESCRIPTION	State Plane Coordinates			STATION and OFFSET
		NORTH (Y)	EAST (X)	ELEV. (Z)	
C.P. 500	I.P. W/ KYTC CAP	3703578.245	5483215.340	750.408	51+16.87, 55.853RT
C.P. 501	I.P. W/ KYTC CAP	3703460.043	5483435.105	754.374	53+53.71, 14.270 RT

COMMONWEALTH OF KENTUCKY
DEPARTMENT OF HIGHWAYS

TEAM KENTUCKY

DRAWING TITLE: COORDINATE CONTROL SHEET

HORIZONTAL SCALE
SCALE: 1"=20'

0' XX' XXX' XXX'

STA. 48+23.76 TO STA. 54+23.76

ITEM NO. XX-XXXX.XX

COUNTY OF OWSLEY

SHEET NO. R6

DISTURBED DRAINAGE AREAS		
SECTION	DISTURBED AREA (ACRES)	MAXIMUM SEDIMENT VOLUME (CU FT)
DDA 1	0.060	216.96
DDA 2	0.340	1224.02
DDA 3	0.338	1218.43
DDA 4	0.103	370.53

NOTE:
DIVISION OF WATER CATEGORIZES STURGEON CREEK AS A KENTUCKY SPECIAL USE WATERS. SPECIAL CONDITIONS REQUIRED FOR INDIVIDUAL WATER QUALITY CERTIFICATION.

SEE PS&E ENVIRONMENTAL PACKAGE FOR DETAILS.

49+00
50+00
51+00
52+00
53+00

STURGEON CREEK

OWSLEY COUNTY FISCAL COURT
DB 107 PG 7

X 5483135.043
Y 3703742.158

BEGIN CONST.
STA 49+00.00

POINT DISCHARGE DDA 3
X: 5483227.9114
Y: 3703697.2349

DISTURBED LIMIT

DISTURBED DRAINAGE AREA 1

OWSLEY COUNTY PARK

S58°42'25"E

DISTURBED DRAINAGE AREA 4

POINT DISCHARGE DDA 2
X: 5483187.2577
Y: 3703626.2611

POB 48+24.26

PI STA 52+12.11
Δ = 28°49'55" LT
T = 38.56'
L = 75.48'
R = 150.00'
E = 4.88'
e = NC
Runoff = N/A
Runout = N/A

LT. STA. 53+67.93 CONST. 12' ENT
34 SQ YD 1.5" ASPH SURF
34 SQ YD 3" ASPH BASE
34 SQ YD 4" CRUSHED STONE BASE

PC 51+73.56

PT 52+49.04

END CONST.
STA 53+92.29

GRAVEL

DISTURBED LIMIT

S34°51'07"E

DISTURBED DRAINAGE AREA 3

S63°41'02"E

LITTLE STURGEON CREEK ROAD

C.P. 501

KENTUCKY ROUTE 30

PC 50+49.55

C.P. 500

PT 51+29.29

DISTURBED DRAINAGE AREA 2

DISTURBED LIMIT

POE 53+92.29

BEGIN BRIDGE STA. 49+51.00
END BRIDGE STA. 50+49.00
0° SKEWED ONE-SPAN BRIDGE (98.0')

•SEE BRIDGE PLAN FOR DETAILS

PI STA 50+99.54
Δ = 23°51'15" RT
T = 31.68'
L = 62.45'
R = 150.00'
E = 3.31'
e = NC
Runoff = N/A
Runout = N/A

LITTLE STURGEON CREEK

STURGEON CREEK

EROSION CONTROL LEGEND

- SILT TRAP TYPE A ALTERNATE 1
- SILT TRAP TYPE A ALTERNATE 2
- SILT TRAP TYPE B
- SILT TRAP TYPE C
- SILT FENCE — SF —
- TEMPORARY SILT DITCH
- DISTURBED DRAINAGE AREA
- OVERLAND SHEET FLOW
- PROPOSED R/W
- PROPOSED EASEMENT

NOTE: ADDITIONAL EXCAVATION, GRADING, OR OTHER SOIL DISTURBING ACTIVITIES OUTSIDE THE DISTURB LIMITS AS SHOWN TO BE ADDRESSED BY THE CONTRACTOR. EROSION PREVENTION AND SEDIMENT CONTROLS FOR THOSE ACTIVITIES TO BE SHOWN ON LATER VERSIONS OF THE BMP KEPT ON SITE.

COMMONWEALTH OF KENTUCKY
DEPARTMENT OF HIGHWAYS
TEAM KENTUCKY

DRAWING TITLE: EROSION CONTROL SHEET

HORIZONTAL SCALE
SCALE: 1"=20'

0' XX' XXX' XXX'

STA. 48+23.76 TO STA. 54+23.76

ITEM NO. XX-XXXX.XX
COUNTY OF OWSLEY
SHEET NO. R7

OpenRoads Designer v23.00.01.11 USER: Min.Jiang FILE NAME: C:\PWWORK\MIN.JIANG\D2405329\EROSION CONTROL SHEET.DGN

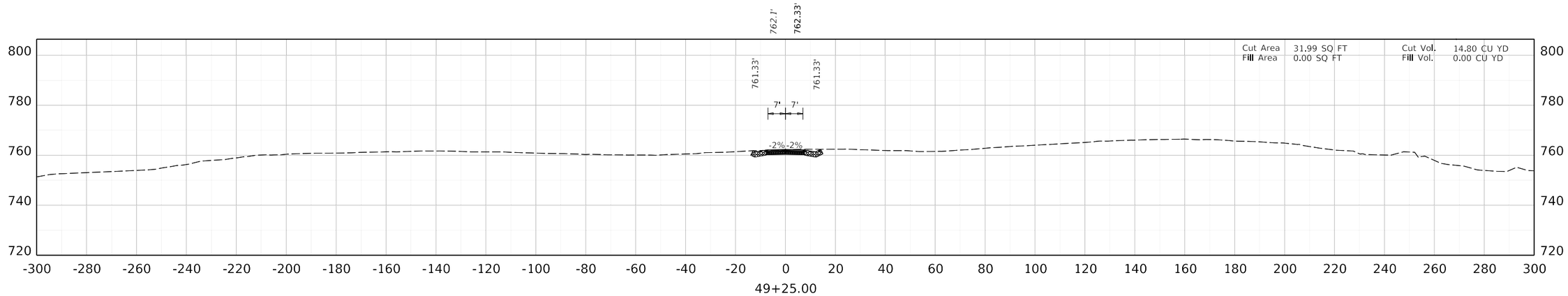

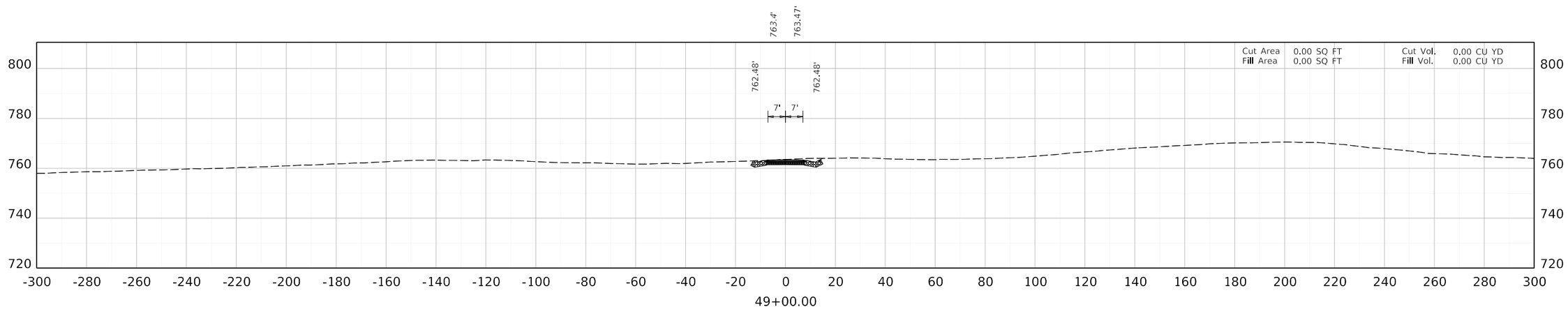

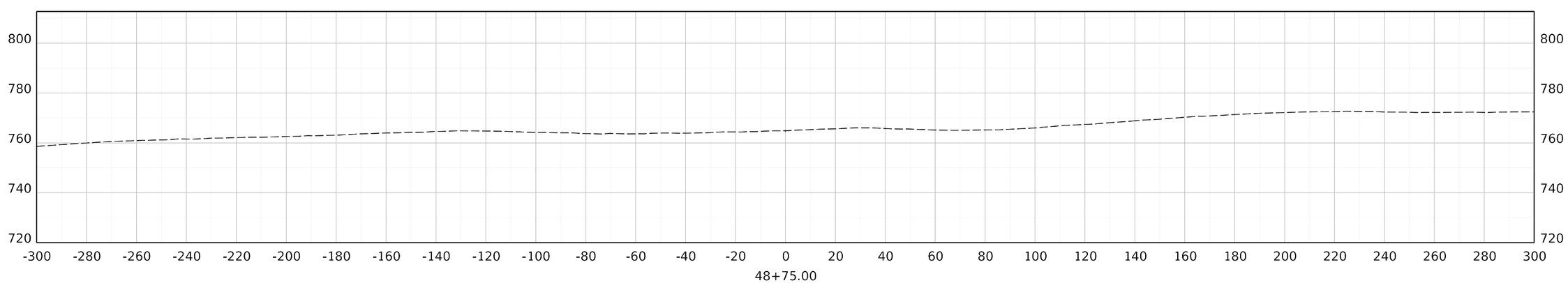

COMMONWEALTH OF KENTUCKY
DEPARTMENT OF HIGHWAYS

TEAM KENTUCKY

DRAWING TITLE: NEW STURGEON CREEK BRIDGE

HORIZONTAL SCALE
SCALE: 1" = 20'

0' 20' 40' 80'

STA. 48+75.00 TO STA. 49+25.00

ITEM NO. XX-XXXX.XX
COUNTY OF OWSLEY
SHEET NO. X1

OpenRoads Designer v10.12.02.4
USER: Min.Jiang
FILE NAME: C:\PWWORK\MIN.JIANG\D2405329\NEW CROSS-SECTIONS 7 14 2025.DGN

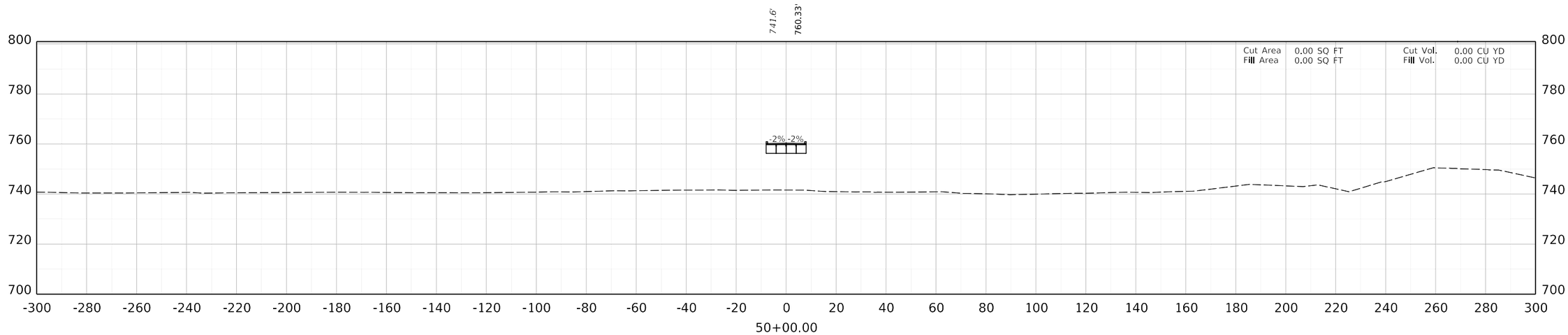

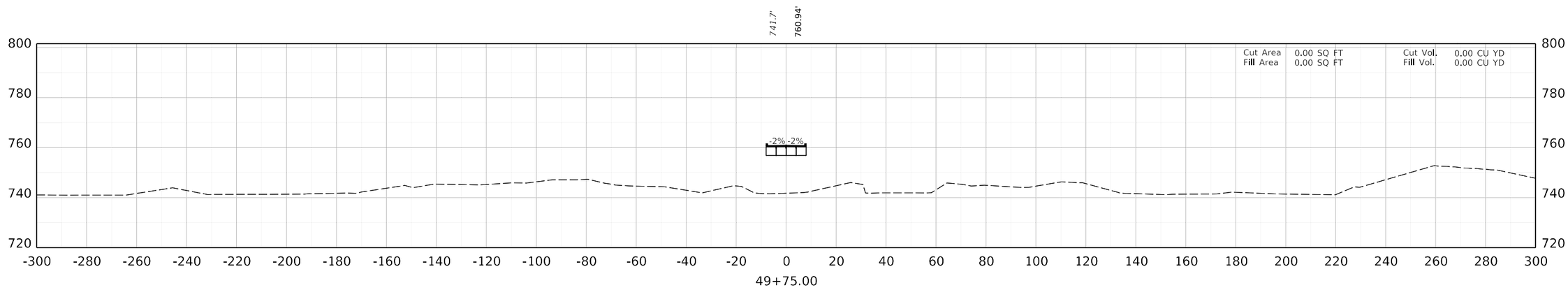

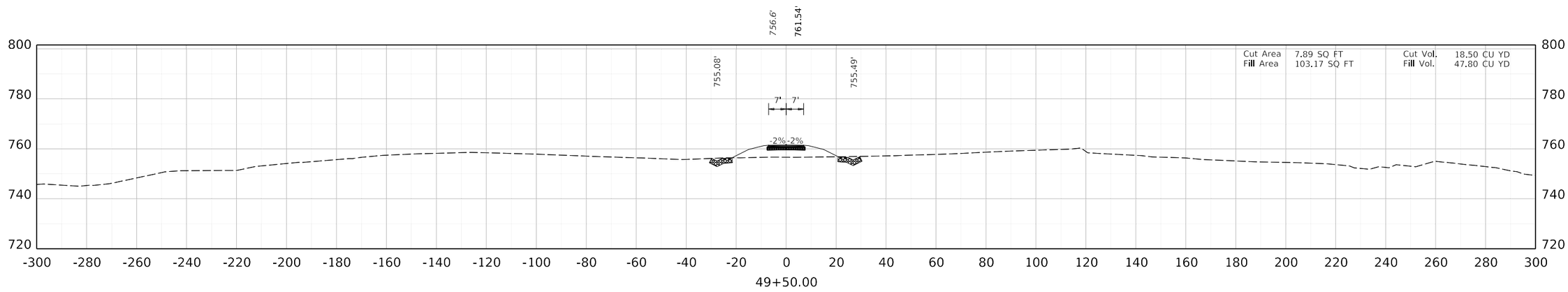

COMMONWEALTH OF KENTUCKY
DEPARTMENT OF HIGHWAYS

TEAM KENTUCKY

DRAWING TITLE: NEW STURGEON CREEK BRIDGE

HORIZONTAL SCALE
SCALE: 1" = 20'

0' 20' 40' 80'

STA. 49+50.00 TO STA. 50+00.00

ITEM NO. XX-XXXX.XX

COUNTY OF OWSLEY

SHEET NO. X2

OpenRoads Designer v10.12.02.4

USER: Min.Jiang

FILE NAME: C:\PWWORK\MIN.JIANG\D2405329\NEW CROSS-SECTIONS 7 14 2025.DGN

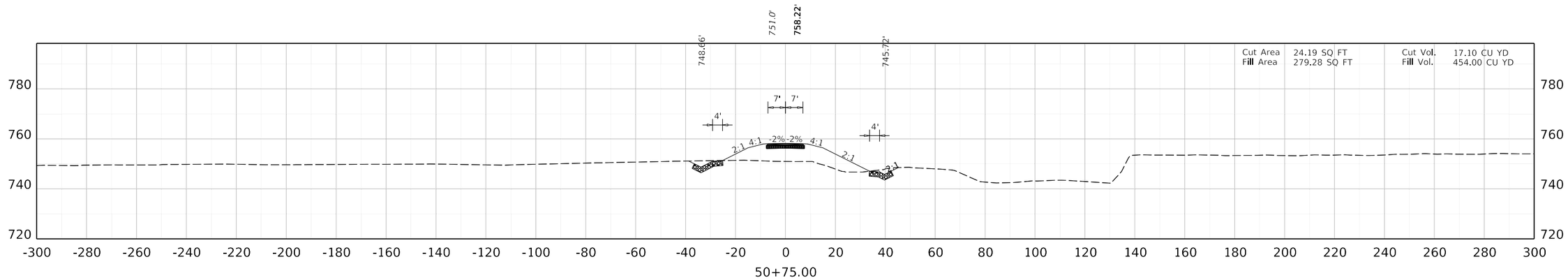

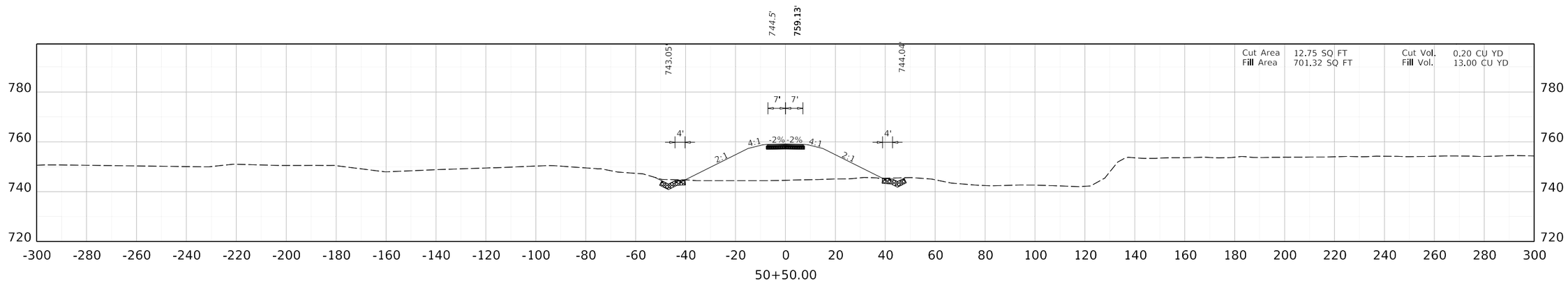

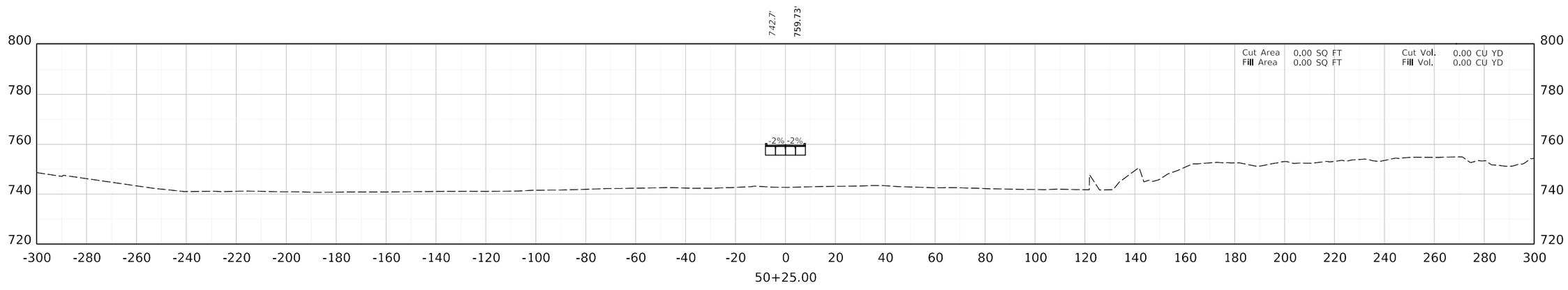

COMMONWEALTH OF KENTUCKY
DEPARTMENT OF HIGHWAYS

TEAM KENTUCKY

DRAWING TITLE: NEW STURGEON CREEK BRIDGE

HORIZONTAL SCALE
SCALE: 1" = 20'

0' 20' 40' 80'

STA. 50+25.00 TO STA. 50+75.00

ITEM NO. XX-XXXX.XX
COUNTY OF OWSLEY
SHEET NO. X3

OpenRoads Designer v10.12.02.4 USER: Min.Jiang FILE NAME: C:\PWWORK\MIN.JIANG\D2405329\NEW CROSS-SECTIONS 7 14 2025.DGN

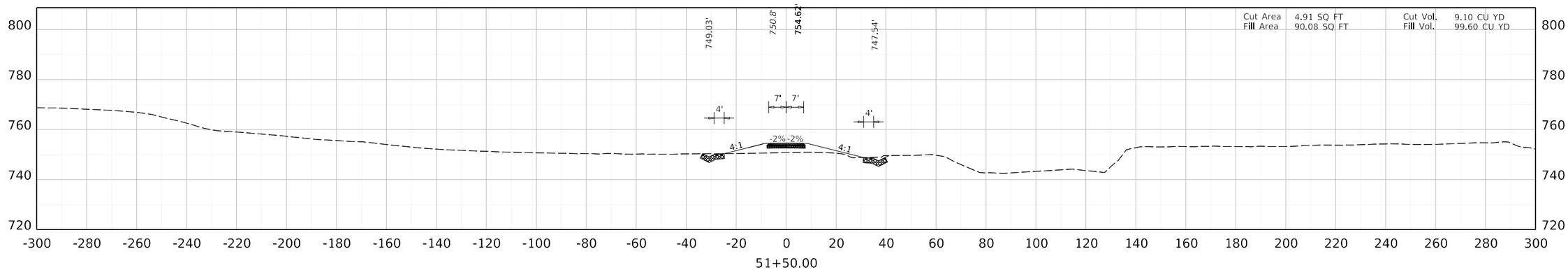

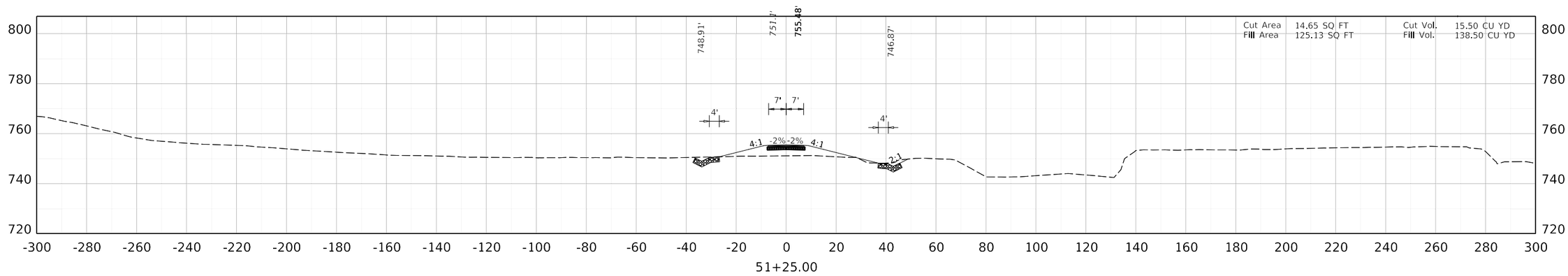

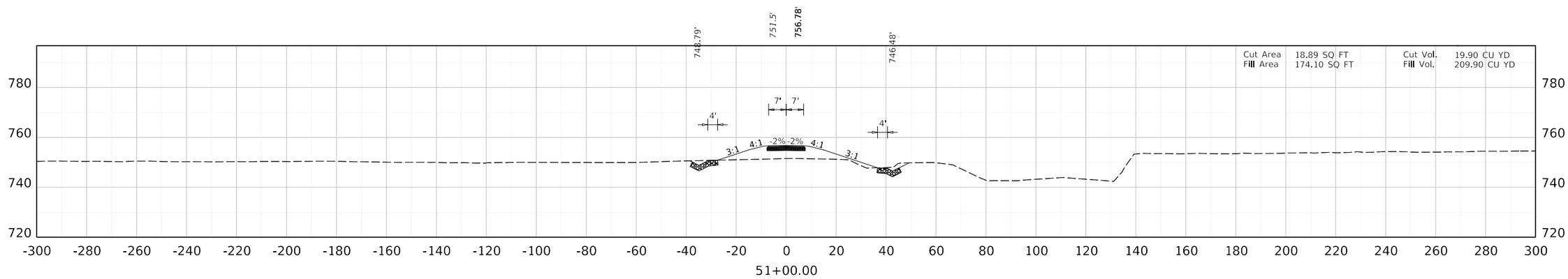

COMMONWEALTH OF KENTUCKY
DEPARTMENT OF HIGHWAYS

TEAM KENTUCKY

DRAWING TITLE: NEW STURGEON CREEK BRIDGE

HORIZONTAL SCALE
SCALE: 1" = 20'

0' 20' 40' 80'

STA. 51+00.00 TO STA. 51+50.00

ITEM NO.

COUNTY OF

SHEET NO.
X4

OpenRoads Designer v10.11.00.115

USER: Patrick.Stone

FILE NAME: C:\KYTC_STANDARDS\ORGANIZATION-CIVIL\KYTC_STANDARDS_OC_KYTC\DGNLIB\SHEET SEEDS\KYTC CROSS SECTION SEED 20 SCALE.DGNLIB

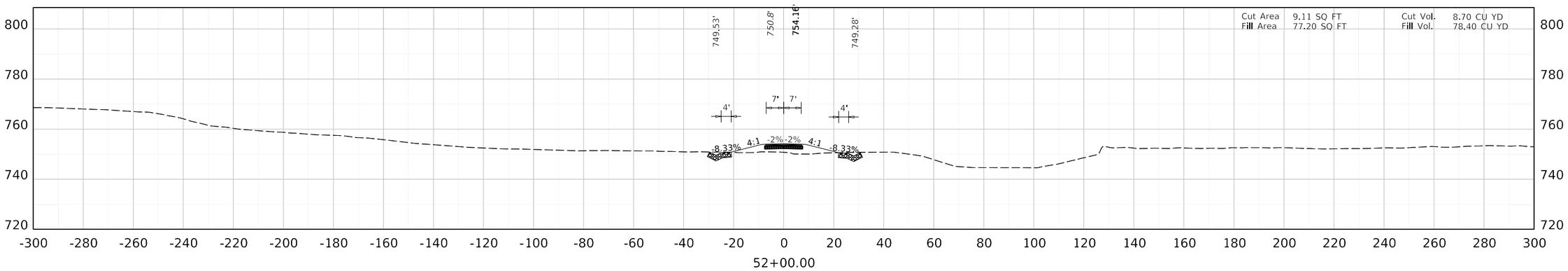

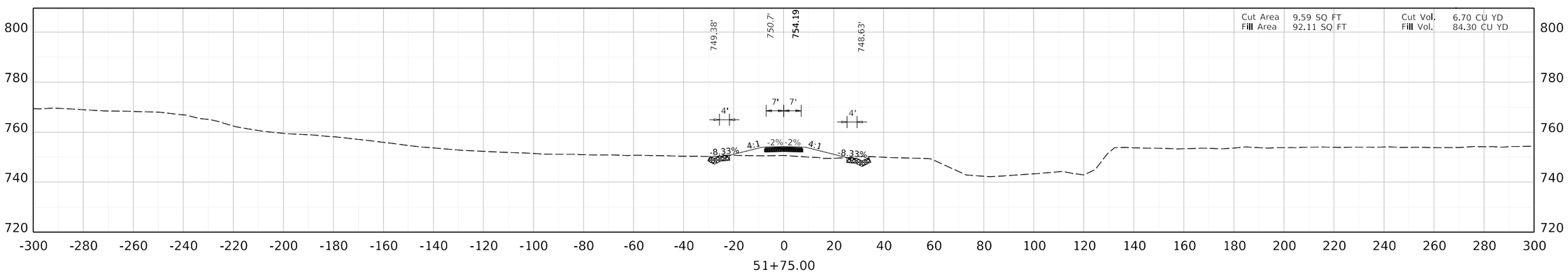

COMMONWEALTH OF KENTUCKY
DEPARTMENT OF HIGHWAYS

TEAM KENTUCKY

DRAWING TITLE: NEW STURGEON CREEK BRIDGE

HORIZONTAL SCALE
SCALE: 1" = 20'

0' 20' 40' 80'

STA. 51+75.00 TO STA. 52+00.00

ITEM NO.

COUNTY OF

SHEET NO.
X5

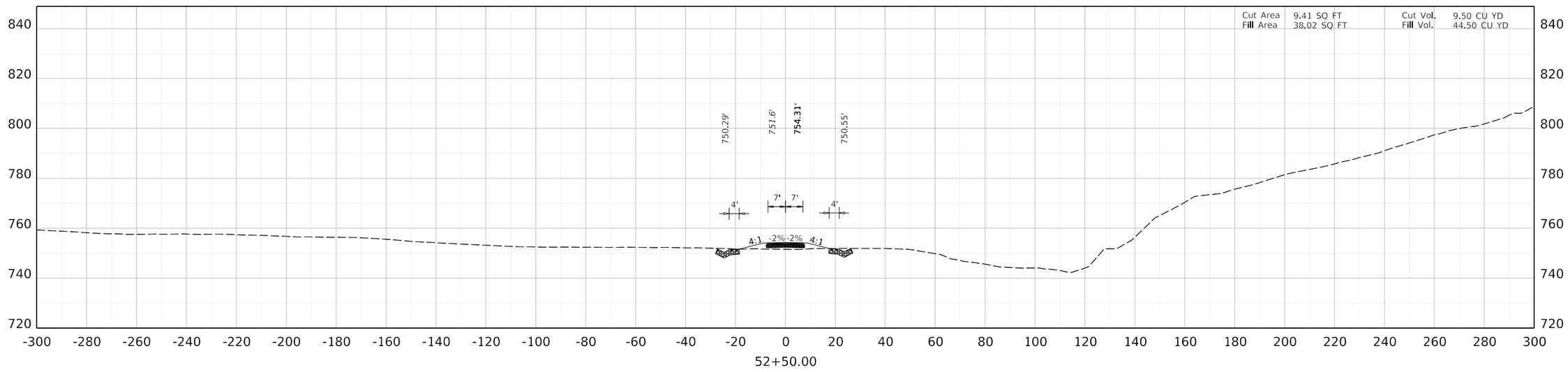

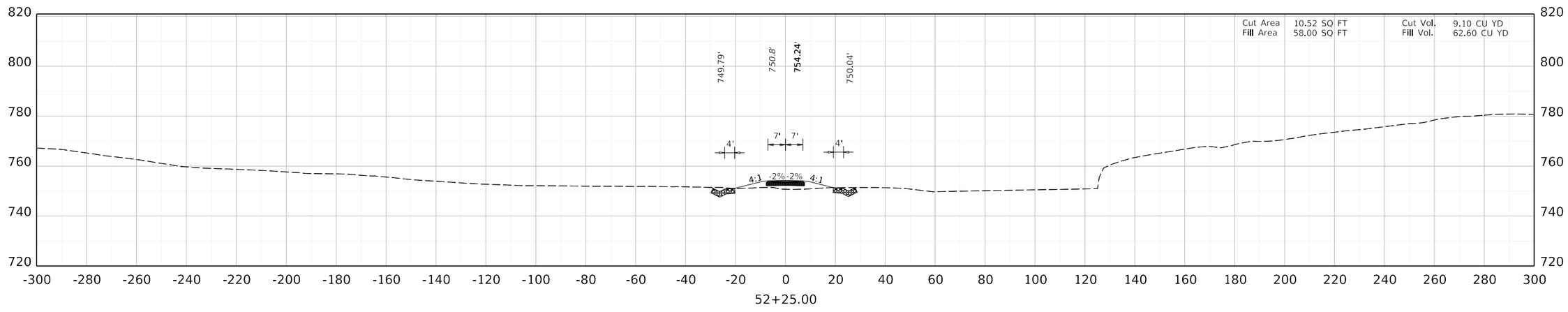

COMMONWEALTH OF KENTUCKY
DEPARTMENT OF HIGHWAYS

TEAM KENTUCKY

DRAWING TITLE: NEW STURGEON CREEK BRIDGE

HORIZONTAL SCALE
SCALE: 1" = 20'

0' 20' 40' 80'

STA. 52+25.00 TO STA. 52+50.00

ITEM NO.

COUNTY OF

SHEET NO.
X6

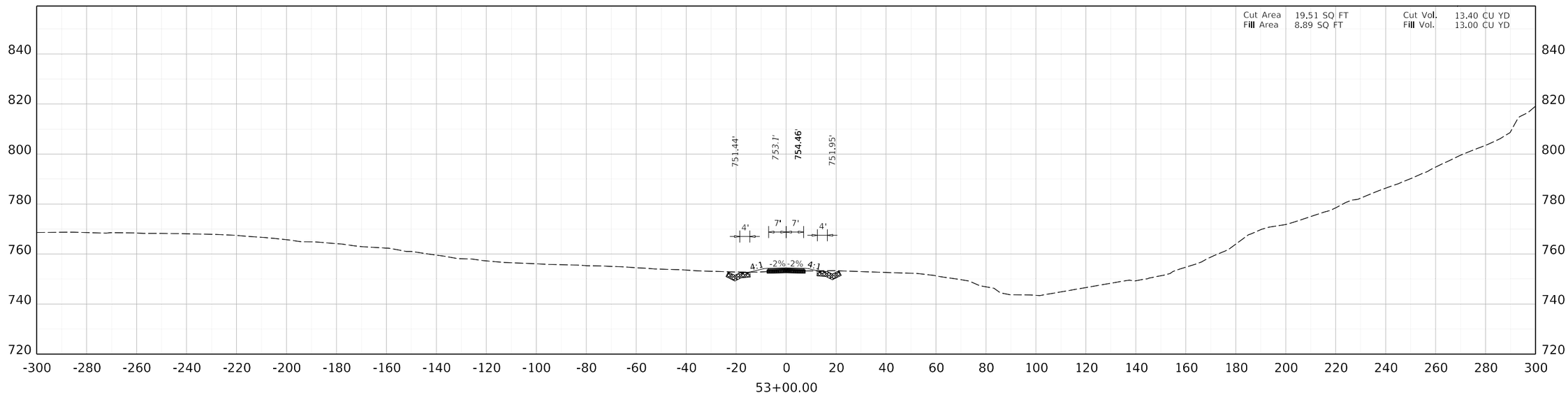

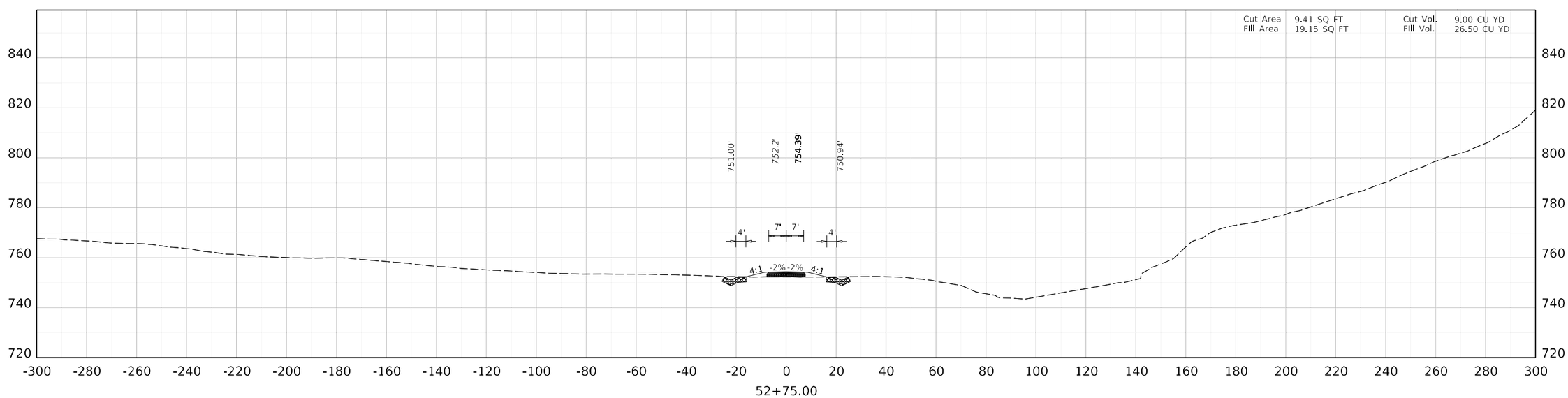

COMMONWEALTH OF KENTUCKY
DEPARTMENT OF HIGHWAYS

TEAM KENTUCKY

DRAWING TITLE: NEW STURGEON CREEK BRIDGE

HORIZONTAL SCALE
SCALE: 1" = 20'

0' 20' 40' 80'

STA. 52+75.00 TO STA. 53+00.00

ITEM NO.

COUNTY OF

SHEET NO.
X7

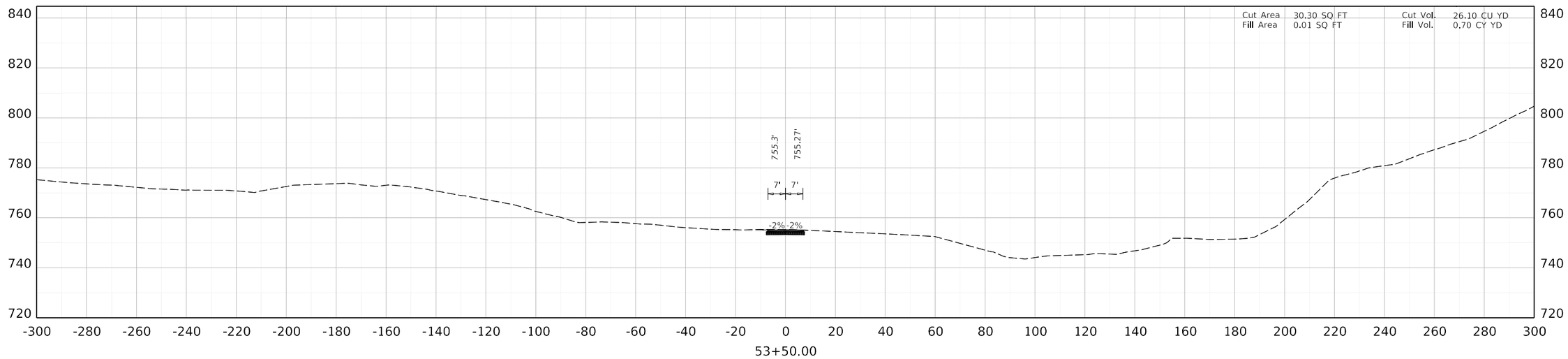

53+50.00

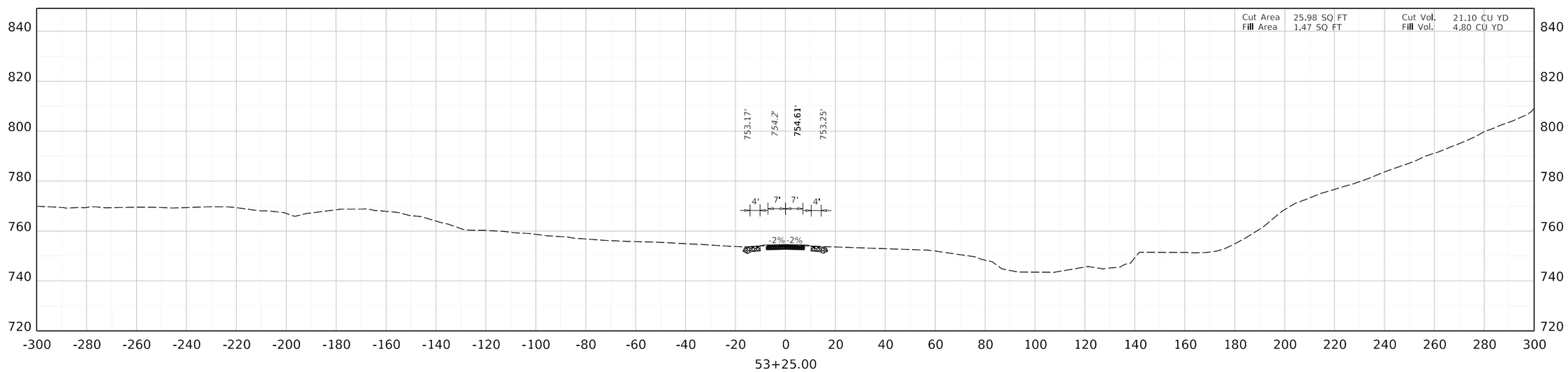

53+25.00

COMMONWEALTH OF KENTUCKY
DEPARTMENT OF HIGHWAYS

TEAM KENTUCKY

DRAWING TITLE: NEW STURGEON CREEK BRIDGE

HORIZONTAL SCALE
SCALE: 1" = 20'

0' 20' 40' 80'

STA. 53+25.00 TO STA. 53+50.00

ITEM NO.

COUNTY OF

SHEET NO.
X8

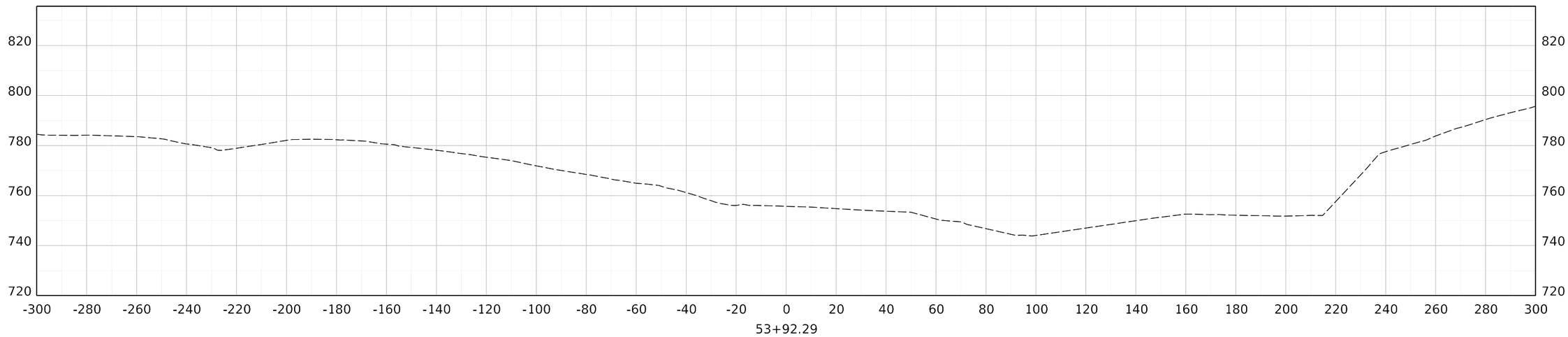

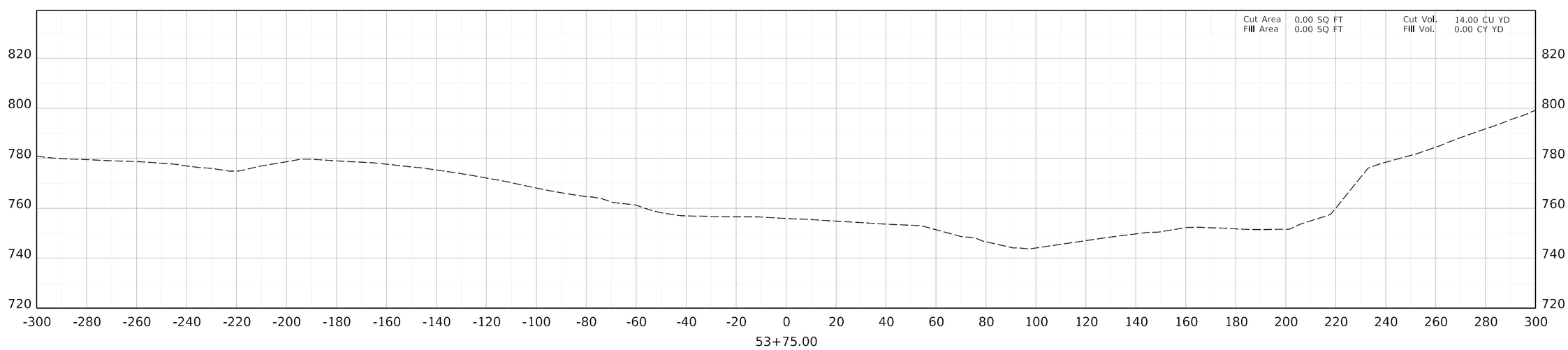

COMMONWEALTH OF KENTUCKY
DEPARTMENT OF HIGHWAYS

TEAM KENTUCKY

DRAWING TITLE: NEW STURGEON CREEK BRIDGE

HORIZONTAL SCALE
SCALE: 1" = 20'

0' 20' 40' 80'

STA. 53+75.00 TO STA. 53+92.29

ITEM NO. XX-XXXX.XX

COUNTY OF OWSLEY

SHEET NO. X9

OpenRoads Designer v10.12.02.4

USER: Min.Jiang

FILE NAME: C:\PWWORK\MIN.JIANG\D2405329\NEW CROSS-SECTIONS 7 14 2025.DGN

LETTING DATE

CONSTRUCTION PROJECT NO.

TRANSPORTATION CABINET
DEPARTMENT OF HIGHWAYS

OWSLEY COUNTY
STURGEON CREEK RD.
OVER STURGEON CREEK
STA. 50+00.00

ESTIMATE OF QUANTITIES

BID ITEM CODE		08100	08104	08150	08151	08002	02231	23378EC	08666	08046	08033	08003	03299	08019	26233EC	08094
BID ITEM		Concrete Class "A"	Concrete Class "AA"	Steel Reinforcement	Steel Reinforcement, Epoxy Coated	Structure Excavation, Solid Rock	Structure Granular Backfill	Concrete Sealing	PPC Box Beam CB42	Piles - Steel HP 12 x 53	Test Piles	Foundation Prep	Armored Edge for Concrete	Cyclopean Stone Rip Rap	Mobilization for Concrete Surface Treatment	Pile Points 12 Inch
UNIT		C.Y.	C.Y.	LBS.	LBS.	C.Y.	C.Y.	S.F.	L.F.	L.F.	L.F.	L.S.	L.F.	TON	L.S.	EA.
Substructure	Abutment #1	32.3		2801		38		315								
	End Bent #2	28.3	8.6		2647		135	381		118	28			169		6
Superstructure			28.3		3489			1846	392				32			
BRIDGE TOTALS		60.6	36.9	2801	6136	38	135	2542	392	118	28	1	32	169	1	6

INDEX OF SHEETS

Sheet No.	Description
S1	Title Sheet
S2	General Notes
S3	Layout
S4	Subsurface Data
S5	Foundation Layout
S6	Abutment #1
S7	Integral End Bent #2
S8	Box Beam General Notes
S9	Sepia 44 - Box Beam Bearing Details
S10	Superstructure
S11	Construction Elevations

SPECIAL NOTES

Special Note for Concrete Sealing

SPECIAL PROVISIONS

69 Embankment at Bridge End Bent Structures

STANDARD DRAWINGS

BGX-012-02	Geotechnical Legend
BBP-003-02	Elastomeric Bearing Pads for Box Beams
BGX-006-10	Stencils for Structures
BJE-001-14	Neoprene Expansion Dams and Armored Edges
BDP-003-03	Box Beam Misc. Details
BDP-004-04	Box Tension Rod Details
BDP-012-04	Box Beam CB42 Details
BPS-003-09	HP 12x53 Steel Pile

SPECIFICATIONS

2019 Standard Specifications for Road and Bridge Construction.

2020 AASHTO LRFD Bridge Design Specifications

COMMONWEALTH OF KENTUCKY
DEPARTMENT OF HIGHWAYS

TEAM KENTUCKY

REVISION	DATE

PREPARED BY
Division of Structural Design

DATE: JUNE 2025	CHECKED BY
DESIGNED BY: J. VAN ZEE	K. EE
DETAILED BY: M. BAWITHAWNG	J. VAN ZEE

TITLE SHEET

CROSSING: Sturgeon Creek

ROUTE: Sturgeon Creek Rd

ITEM NO.

SHEET NO.: S1

COUNTY OF: OWSLEY

DRAWING NUMBER: 28995

GENERAL NOTES

SPECIFICATIONS: All references to the Specifications are to the current edition of the Kentucky Department of Highways Standard Specifications for Road and Bridge Construction with current Supplemental Specifications. All references to the AASHTO Specifications are to the current edition of the AASHTO LRFD Bridge Design Specs, with interims.

DESIGN LOAD: This bridge is designed for a KYHL-93 live load. The KYHL-93 live load is arrived at by increasing the standard HL-93 truck and lane loads as specified in the AASHTO Specifications by 25%.

FUTURE WEARING SURFACE: This structure is designed for a 15 PSF future wearing surface load.

DESIGN STRESSES:	Concrete Class "A"	~	f'c = 3500 psi
	Concrete Class "AA"	~	f'c = 4000 psi
	Steel Reinforcement	~	Fy = 60,000 psi
	Structural Steel Yield Strength	~	Fy = 50,000 psi

DESIGN METHOD: All reinforced concrete members are designed by the load and resistance factor method as specified in the current AASHTO Specifications.

WIND LOAD: This bridge is designed for a wind load based on a wind velocity of 100 mph.

REINFORCEMENT: Dimensions shown from the face of concrete to bars are to center of bars unless otherwise shown. Spacing of bars is from center to center of bars. Clear distance to face of concrete is 2", unless otherwise noted. Any reinforcement bars designed be suffix (e) in the plans shall be epoxy coated in accordance with section 811.10 of the Standard Specifications. Any reinforcing bars designated by suffix (s) in a bill of reinforcement shall be considered a stirrup for purposes of bend diameters.

BEVELED EDGES: Bevel all exposed edges ¾" unless otherwise noted.

COMPLETION OF THE STRUCTURE: The Contractor is required to complete the structure in accordance with the plans and specifications. Material, labor or construction operations, not otherwise specified, are to be included in the bid item most appropriate to the work involved. This may include cofferdams, shoring, excavations, backfilling, removal of all or parts of existing structures, phase construction, incidental materials, labor or anything else required to complete the structure.

SHOP DRAWINGS: Submit shop drawings that are required by the plans and specifications directly to the Division of Structural Design. Is any changes in the design plans are proposed by a fabricator or supplier, submit those changes to the Department through the Contractor.

FOUNDATION DATA: See Foundation Layout Sheet.

DIMENSIONS: Dimensions are for a normal temperature of 60 degrees Fahrenheit. Layout dimensions are horizontal dimensions.

SUPERSTRUCTURE SLAB: Ensure the entire superstructure slab is poured continuously, out to out, before allowing any concrete to set.

PILE POINTS: Provide pile points for all point bearing piles. Ensure pile points are in accordance with Section 604 of the Specifications and of the type as shown on the Foundation Layout Sheet.

SLOPE PROTECTION: Use dry cyclopean stone slope protection in accordance with the plans and Specifications. Geotextile Fabric is to be incidental to this item.

MASONRY COATING: Contrary to the Specifications, do not apply Masonry Coating. Apply Concrete Sealing in place of Masonry Coating as noted in CONCRETE SEALER note.

CONCRETE SEALER: All areas detailed in the specifications as requiring masonry coating shall be sealed in accordance with the special note for concrete sealing. The superstructure deck, barriers and overhangs shall also be sealed as shown herein these plans. Concrete surfaces (except the deck) shall receive the ordinary surface finish as described in section 601.03.18(A) prior to being sealed.

The following abbreviations may have been used in the preparation of these plans:

bet.	between
b.f.	Back Face
BOF	Bottom of Footing
BOS	Bottom of Slab
bot.	Bottom
Brg.	Bearing
C to C	Center to Center
c.e.	Current Edition
C.Y.	Cubic Yards
Chd.	Chord
CL	Center Line
Clr.	Clear
Conc.	Concrete
Cu.	Cubic
Dwg.	Drawing
e.f.	Each Face
El.	Elevation
eq.	Equal
Est.	Estimate
Ext.	Exterior
F to F	Face to Face
f.f.	Front Face
f.s.	Far Side
fr.	Front
ft.	Feet
I.D.	Inside Diameter
in.	Inch
Int.	Interior
L	Left
LBS	Low Bridge Seat
LBS.	Pounds
M	Meter
MPH	Miles Per Hour
n.s.	Near Side
O.D.	Outside Diameter
Opp.	Opposite
PC	Point of Curvature
Perp.	Perpendicular
PI	Point of Intersection
PPC	Precast Prestressed Concrete
PPCDU	Precast Prestressed Deck Unit
PSI	Pounds per Square Inch
PT	Point of Tangency
R	Radius
R	Right
RCBC	Reinforced Concrete Box Culvert
RCDG	Reinforced Concrete Deck Girder
Req'd	Required
RR	Railroad
Shld.	Shoulder
spa.	Spaces
Sta.	Station
Std.	Standard
Str.	Straight
Tan	Tangent
Thru	Through
TOF	Top of Footing
TOS	Top of Slab
Tot.	Total
Typ.	Typical
Vert.	Vertical
W.P.	Working Point
Yd.	Yard

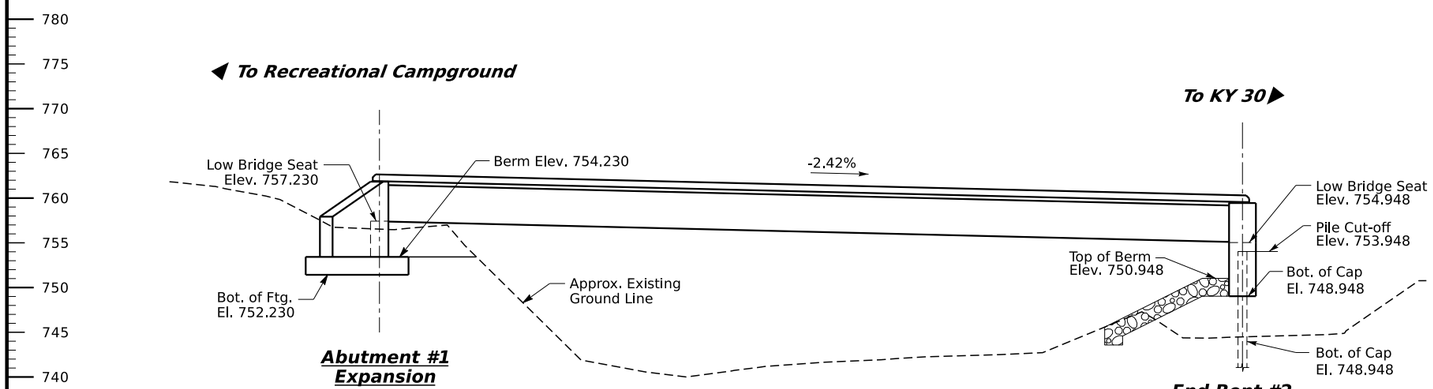

ELEVATION

98'-0" PPC Box Beam, CB42-48 ~ Simple Span
KY-HL 93 Live Load ~ 0° Skew
14'-6" Bridge Roadway Width

NOTE:
For end bent backfill and method of construction see Special Provision 69. Include the cost of any Required Geotextile fabric in the unit price for Structure Granular Backfill.

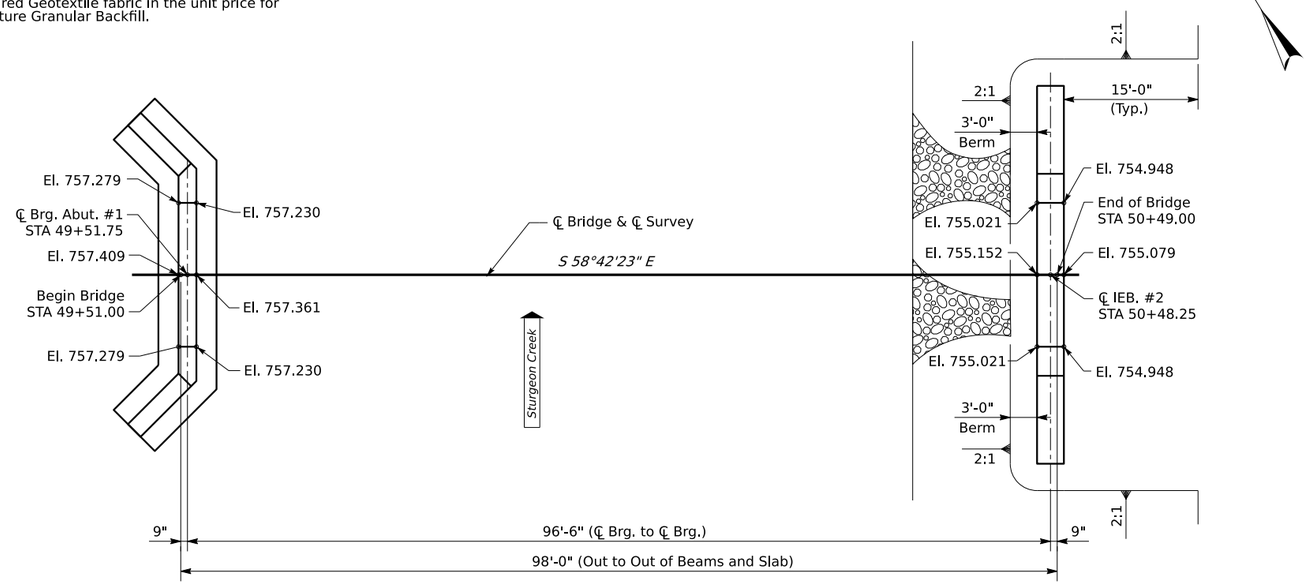

PLAN

Superstructure Not Shown

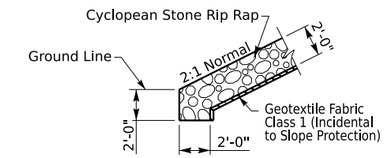

TOE OF SLOPE DETAIL

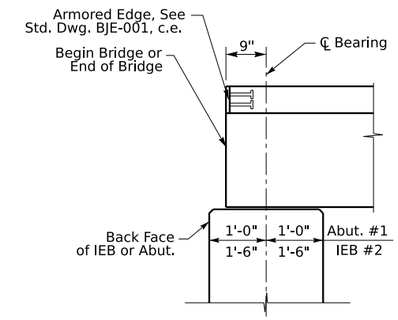

END OF BEAM DETAIL

(Measured Along ℄ Beam)

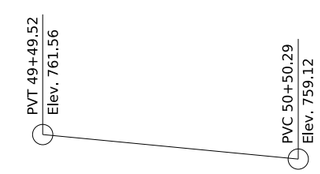

PROFILE GRADE

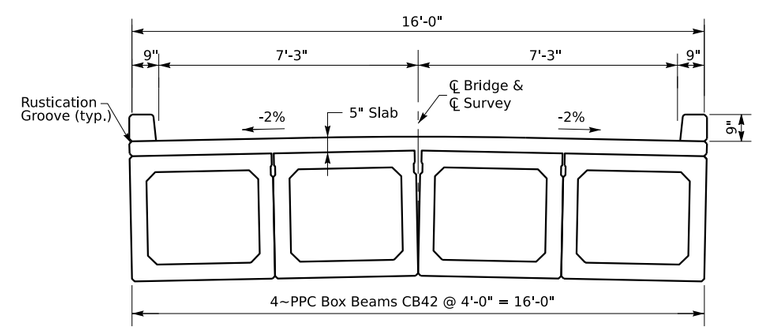

TYPICAL SECTION

COMMONWEALTH OF KENTUCKY DEPARTMENT OF HIGHWAYS	REVISION / DATE	PREPARED BY Division of Structural Design	DATE: JUNE 2025	CHECKED BY	LAYOUT	ROUTE Sturgeon Creek Rd	ITEM NO.	COUNTY OF OWSLEY
			DESIGNED BY: J. VAN ZEE	K. EE	CROSSING Sturgeon Creek		SHEET NO. S3	DRAWING NUMBER 28995
			DETAILED BY: M. BAWITHAWNG	J. VAN ZEE				

MicroStation v10.16.3.31 USER: messiah.bawithawn DATE PLOTTED: 16-JUL-2025 FILE NAME: J:\District10\RSnM\Owsley Sturgeon Creek\Details quantities closeout\28995.dgn

SUBSURFACE DATA

Plan Scale 1" = 20'

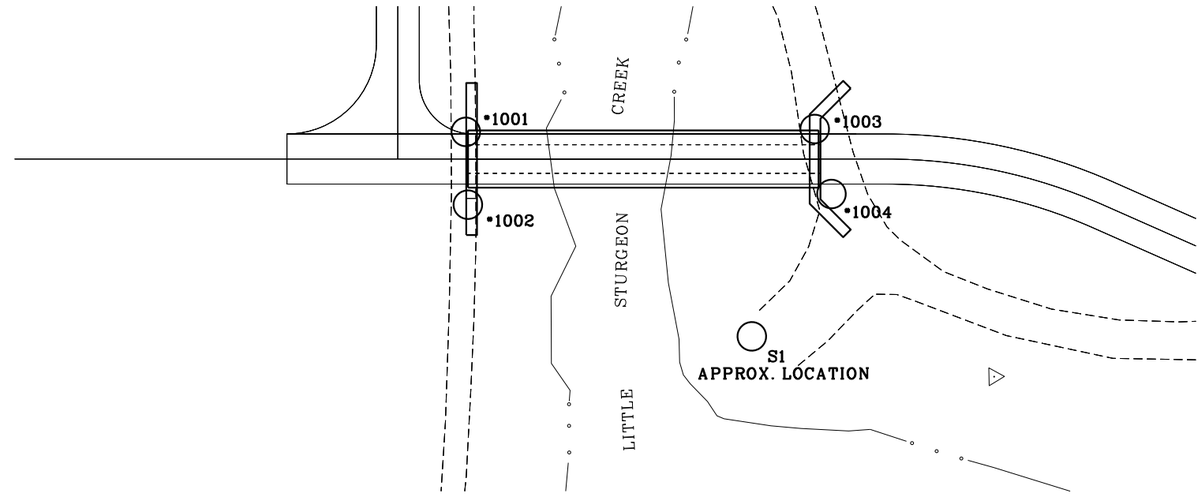

Profile Scale:
Vertical 1" = 10'
Horizontal not to scale

END BENT ONE — APPROXIMATE ROADWAY GRADE ELEV. = 761.53

END BENT TWO — APPROXIMATE ROADWAY GRADE ELEV. = 759.14

Hole No.	1001	1002	S1	1003	1004
Lat.	37.478710	37.478662		37.478568	37.478519
Long.	-83.813504	-83.813540		-83.813218	-83.813239
Elev. (NAVD 88 datum)	756.60	756.80	742.20	744.40	745.00

ROD SOUNDING

760 750 740 730 720 710 700

R (756.50)

KY RQD REC
33 98
67 89
48 100

Cored Overburden: w/Sandstone cobbles & fragments
Shale:(70%) brown, silty, w/Sandstone (30%) partings, brownish-gray, very fine to fine grain
Sandstone: light brownish-gray to gray, very fine to medium grain, w/Shale partings & laminations,coal stringers, light water staining, durable
Shale:dark gray, silty

Top of rock elev.= 755.60
Base of weathered rock elev.= 754.30

R (739.20)

D_{50} (mm) w% LI
2.888 16
N=5
N=10
A-1-b(0),GM,S-C=16(11-5)

KY RQD REC
4 94
SDI(JS) 99(5)
62 100

Cored Overburden: w/Sandstone cobbles & fragments
Shale:(55%) dark gray silty, w/Sandstone (45%) partings, gray, very fine grain, w/Shale laminations & few partings
Shale: dark gray, silty, w/irregular Sandstone partings & laminations, rippled

Top of rock elev.= 729.30
No weathered rock

R (731.40)

Datum

The Presumptive Factored Bearing Resistance at the Service Limit State is
20 ksf for Spread Footings on Competent Unweathered Bedrock

S-065-2023

COMMONWEALTH OF KENTUCKY
DEPARTMENT OF HIGHWAYS

REVISION	DATE

PREPARED BY
Division of Structural Design

DATE: 20-NOVEMBER-2024	CHECKED BY
DESIGNED BY:	
DETAILED BY: E. BAILEY	R. McDONALD

SUBSURFACE DATA
CROSSING: Sturgeon Creek
ROUTE: Sturgeon Creek Rd
ITEM NO.
SHEET NO. S4
COUNTY OF: OWSLEY
DRAWING NUMBER: 28995

MicroStation v10.16.3.31 USER: messiah.bawithawn DATE PLOTTED: 16-JUL-2025 FILE NAME: J:\District10\RSnM\Owsley Sturgeon Creek\Details quantities closeout\28995.dgn

Spread Footing Record Abutment #1		
Point	Plan Footing Elevation	As-Built Footing Elevation
A	752.230'	
B	752.230'	
C	752.230'	

Footing is designed for a maximum pressure of 8 KSF.

The allowable bearing capacity is 20 KSF.

The Project Resident Engineer is to record the "As-Built Footing Elevation" taken at the bottom of footing and submit one copy of this sheet to:

Kentucky Transportation Cabinet
Division of Structural Design
Room #322
200 Mero Street
Frankfort, KY 40622

If the spread footing foundation is stepped due to unsuitable material found at the given elevation, record the location and elevation of the step as well.

PILE RECORD FOR POINT BEARING PILES				
Pile No.	Pile Cut-off Elevation	Pile Length In Place	Point of Pile Elevation As Driven	Design Axial Load
	FEET	FEET	FEET	TONS
End Bent #2				
1	753.948			93
2	753.948			93
3	753.948			93
4	753.948			93
5	753.948			93
6	753.948			93
7	753.948			93

ABUTMENT #1 FOOTING

All footing excavations in bedrock shall be cut neatly so that no forming or backfilling is necessary in the construction of the portions of the footings located in rock. Concrete should be placed directly against the cut rock faces. Mass concrete should be placed in the excavation from the top of the footing to the bedrock surface where the footing does not extend to the bedrock surface.

The bedrock at this location is susceptible to weathering and softening in the presence of water. Water must be kept out of the footing excavations. The footing steel and concrete should be placed the same day as or as soon as practical after the footing excavation is made. If the bedrock becomes softened at bearing elevation, the softened material should be undercut to unweathered material prior to placing the concrete.

If the bedrock becomes softened at bearing elevation, the softened material should be undercut to unweathered material prior to placing the concrete. Seasonal groundwater fluctuations may cause groundwater infiltration into the footing excavations and a dewatering method may be necessary.

The spread footings shall be embedded a minimum of 2.0 feet into competent unweathered bedrock. Footings may be raised if competent unweathered bedrock is encountered at a higher elevation. (Note: Minimum 2.0 feet of embedment must still be attained.)

Solid rock excavation will be required for installation of this structure's spread footings.

Sheeting, Shoring, Cofferdams and/or dewatering methods will be required to facilitate foundation construction of spread footings. All costs incidental to lump sum bid for Foundation Preparation.

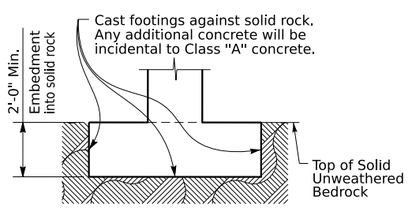

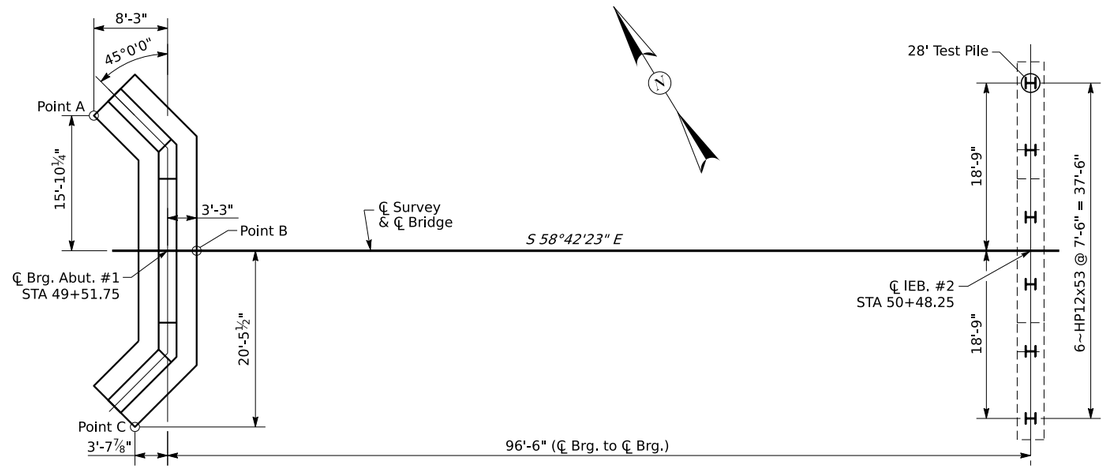

FOUNDATION LAYOUT

FIELD DATA

For each pile, the Project Engineer shall record the following on this sheet: Pile Length in Place and Point of Pile Elevations as Driven.

Submit this record to:

Kentucky Transportation Cabinet
Division of Structural Design
3rd. Floor East
200 Mero Street
Frankfort, KY 40622

This pile record does not replace other pile records the Project Engineer is required to keep and submit.

DEFINITIONS OF TERMS

PILE CUT- OFF ELEVATION: Elevation of the top of pile in the finished structure.

PILE LENGTH IN PLACE: Actual pile length below the Pile Cut-Off Elevation in the finished structure.

PILE TIP ELEVATION AS DRIVEN: Actual point of pile elevation in the finished structure.

DESIGN AXIAL LOAD: Load carried by each pile as estimated from structural design calculations for Factored LRFD Loadings.

CALCULATED FIELD BEARING: Contrary to Section 604.03.07 of the Standard Specifications, in place bearing values are not required for piles bearing on rock when driven to practical refusal.

DRIVING CRITERIA

PRACTICAL REFUSAL: Drive point bearing piles to practical refusal. For this project minimum blow requirements are reached after total penetration becomes ½ inch or less for 10 consecutive blows, practical refusal is obtained after the pile is struck an additional 10 blows with total penetration of ½ inch or less. Advance the production piling to the driving resistances specified above and to depths determined by test piles) and subsurface data sheets). Immediately cease driving operations if the pile visibly yields or becomes damaged during driving. If hard driving is encountered because of dense strata or an obstruction, such as a boulder before the pile is advanced to the depth anticipated, the Engineer will determine if more blows than the average driving resistance specified for practical refusal is required to further advance the pile. Drive additional production and test piles if directed by the Engineer.

HAMMER CRITERIA: A hammer with a rated energy of between 25 and 35 kip-ft will be required to drive the H-piles to practical refusal without encountering excessive blow counts or damaging the pile. The contractor shall submit the proposed pile driving system to the Department for approval prior to the installation of the first pile. Approval of the pile driving system by the Engineer will be subject to satisfactory field performance of the pile driving procedures.

GENERAL NOTES

SPECIFICATIONS: Kentucky Department of Highways Standard Specifications for Road and Bridge Construction, current edition.

PILE Points: Provides Pile Points capable of breaking boulders and seating into sloping rock surface for all piles.

Bill of Reinforcement

MARK	A1	A2	A3	A4	A5	A6	A7	A8	A9	A10	A11	A12	A13	A14	A15	A16	A17	A18
TYPE	Str.	Str.	Str.	Str.	Str.	4	Str.	Str.	Str.	8	8	8	8	7	7	Str.	Str.	Str.
SIZE			#5	#5	#5				#5	#5	#5	#5	#5	#5	#5	#5	#5	#5

H	A1 No.	A1 Size	A1 Length ft.	A1 Length in.	A1 Spacing	A2 No.	A2 Size	A2 Length ft.	A2 Length in.	A2 Spacing	A3 No.	A3 Length ft.	A3 Length in.	A4 No.	A4 Length ft.	A4 Length in.	A5 No.	A5 Length ft.	A5 Length in.
5-6	48	5	6	2	12	48	5	6	2	12	14	9	7	14	9	7	14	27	1

H	A6 No.	A6 Size	A6 Length ft.	A6 Length in.	A6 Spacing	A6 A ft.	A6 A in.	A6 B ft.	A6 B in.	A6 C ft.	A6 C in.	A6 D ft.	A6 D in.	A7 No.	A7 Size	A7 Length ft.	A7 Length in.	A7 Spacing	A8 No.	A8 Size	A8 Length ft.	A8 Length in.	A8 Spacing
5-6	40	5	5	7	12	4	8½	0	10	0	5	4	11	43	5	4	11	12	40	5	2	10	12

H	A9 No.	A9 Length ft.	A9 Length in.	A9 Spacing	A10 No.	A10 Length ft.	A10 Length in.	A11 No.	A11 Length ft.	A11 Length in.	A12 No.	A12 Length ft.	A12 Length in.	A13 No.	A13 Length ft.	A13 Length in.	A14 No.	A14 Length ft.	A14 Length in.	A15 No.	A15 Length ft.	A15 Length in.	A16 No.	A16 Length ft.	A16 Length in.	A17 No.	A17 Length ft.	A17 Length in.	A18 No.	A18 Length ft.	A18 Length in.
5-6	43	2	10	12	4	11	0	4	9	7	4	11	0	4	9	7	4	30	0	4	27	0	2	13	4	2	13	4	56	5	9

Reinforcement Details

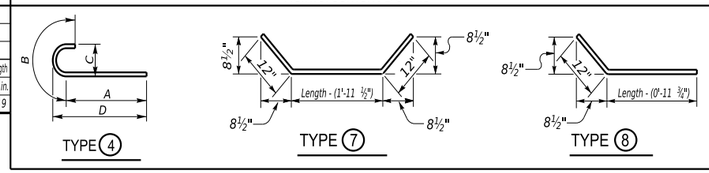

Table of Dimensions

H	W Length ft.	W Length in.	N Length ft.	N Length in.	M1 Length ft.	M1 Length in.	S1 Length ft.	S1 Length in.	T1 Length ft.	T1 Length in.	L1 Length ft.
5-6	6	6	2	3	6	10⅞	13	6⅝	6	10⅞	8

Quantities

H	Concrete* C.Y.	Reinforcement LBS.
5	32.3	2801

*Concrete quantities computed using 21" beam depth on ½" pad & 16'-0" Bridge Width

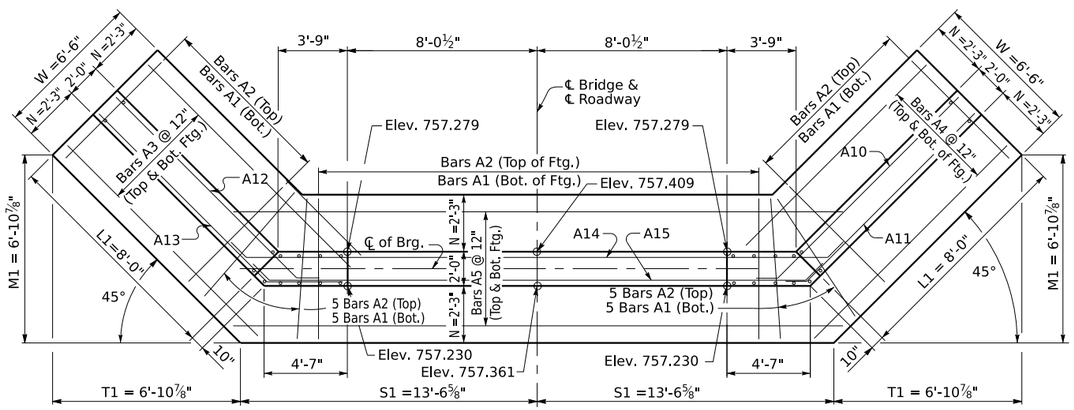

Station Ahead

PLAN

NOTE: Trim A16 & A17 bars if necessary

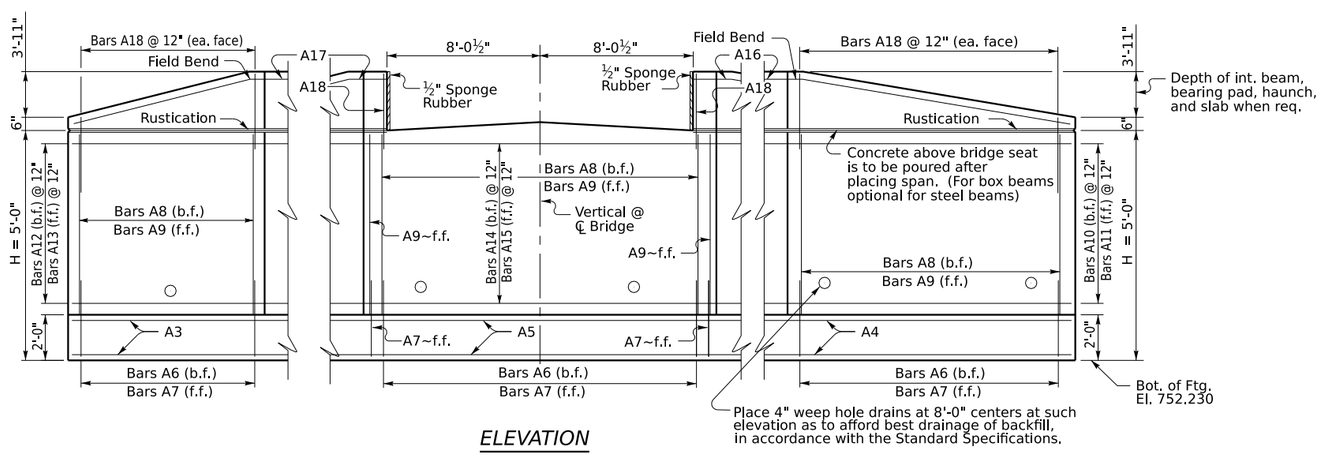

ELEVATION

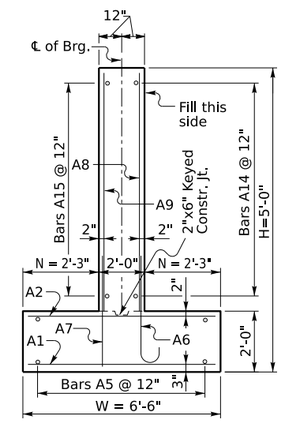

WALL SECTION

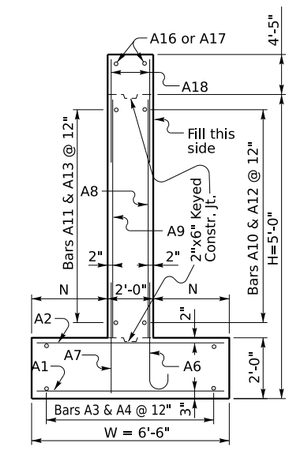

WING SECTION

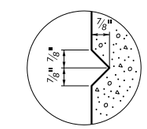

RUSTICATION GROOVE

GENERAL NOTES

SPECIFICATIONS: Construct abutments according to the current edition of the Kentucky Department of Highways Standard Specifications for Road and Bridge Construction. Abutments are designed for side by side box beams as detailed in Standard Drawings BDP-001 through BDP-012, current edition. Dimensions may be adjusted to allow for 17'-6" rolled steel beam bridge width.

FOUNDATION PRESSURE: Construct abutment footings on solid rock bearing material that can support a pressure of 8000 psf service or 10,800 psf strength factored as recommended by a geotechnical engineer.

WING LENGTHS: Calculated assuming 21" superstructure depth and stream bank elevation at top of footing.

FOOTING ELEVATION: Construct bottom of footing below the anticipated scour elevation. (This typically entails embedding the footings 1'- 0" to 2'- 0" into rock and pouring concrete directly against cut rock faces as recommended by geotechnical engineer.)

NOTE: Distances to bars shown are clear dimensions unless otherwise noted.

MATERIAL SPECIFICATIONS:
Concrete, Class "A" = 3500 psi
Steel Reinforcement = Grade 60

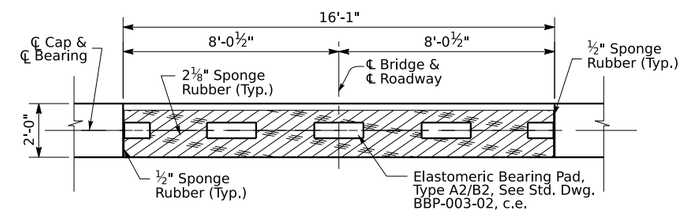

DETAIL ABOVE CAP

COMMONWEALTH OF KENTUCKY
DEPARTMENT OF HIGHWAYS
TEAM KENTUCKY

REVISION	DATE

PREPARED BY
Division of Structural Design

DATE: JUNE 2025	CHECKED BY
DESIGNED BY: J. VAN ZEE	K. EE
DETAILED BY: M. BAWITHAWNG	J. VAN ZEE

ABUTMENT #1
CROSSING: Sturgeon Creek
ROUTE: Sturgeon Creek Rd
ITEM NO.
SHEET NO.: S6
COUNTY OF: OWSLEY
DRAWING NUMBER: 28995

MicroStation v10.16.3.31 USER: messiah.bawithawn DATE PLOTTED: 16-JUL-2025 FILE NAME: J:\District10\RSnM\Owsley Sturgeon Creek\Details quantities closeout\28995.dgn

BILL OF REINFORCEMENT

MARK	TYPE	NO.	SIZE	LENGTH	LOCATION	A	B	C	D
B1e	Str.	9	8	41-11	Cap.				
B2e	Str.	10	5	41-11	Cap Sides				
B3e	14s	41	5	17- 0	Cap Stirrups	5- 7	2- 8		
B4e	Str.	4	5	2- 6	Wings Vertical				
B5e	Str.	4	5	2-11	Wings Vertical				
B6e	Str.	4	5	3- 4	Wings Vertical				
B7e	Str.	4	5	3- 9	Wings Vertical				
B8e	Str.	4	5	4- 1	Wings Vertical				
B9e	Str.	4	5	4- 6	Wings Vertical				
B10e	Str.	4	5	4-11	Wings Vertical				
B11e	Str.	4	5	5- 4	Wings Vertical				
B12e	Str.	4	5	5- 8	Wings Vertical				
B13e	Str.	4	5	6- 1	Wings Vertical				
B14e	Str.	12	5	6- 3	Wings Vertical				
B15e	Str.	4	5	11- 9	Wings Horizontal				
B16e	Str.	4	5	9- 3	Wings Horizontal				
B17e	Str.	4	5	6- 9	Wings Horizontal				
B18e	Str.	4	5	4- 3	Wings Horizontal				
B19e	8	4	6	13- 6	Wings Top	3- 0⅜	10- 5½	3-10½	9- 8⅝

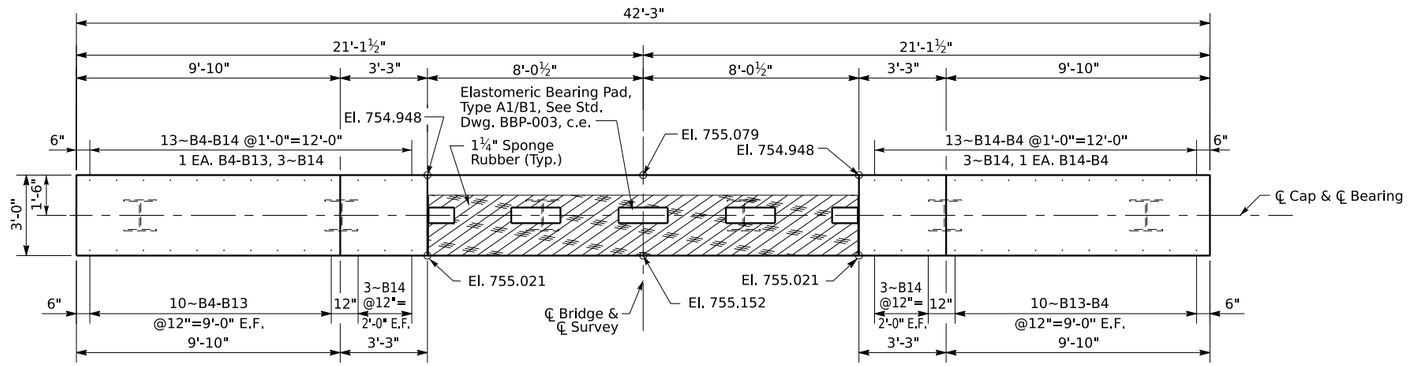

PLAN - Showing Cap & Wing Reinforcement

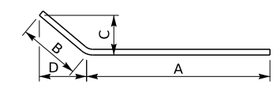

TYPE 8

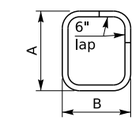

TYPE 14

Note:
1) Pour Class "A" Concrete
2) Erect beams and tension lateral rods
3) Pour Class "AA" Concrete with ½ inch Sponge Rubber between the face of beams and wings. Place the designated 1¼" inch Sponge Rubber underneath beams.

Note: Elevations are given at the top of concrete.

Note: For pile location, see Foundation Layout.

Note: Place beams before backfilling.

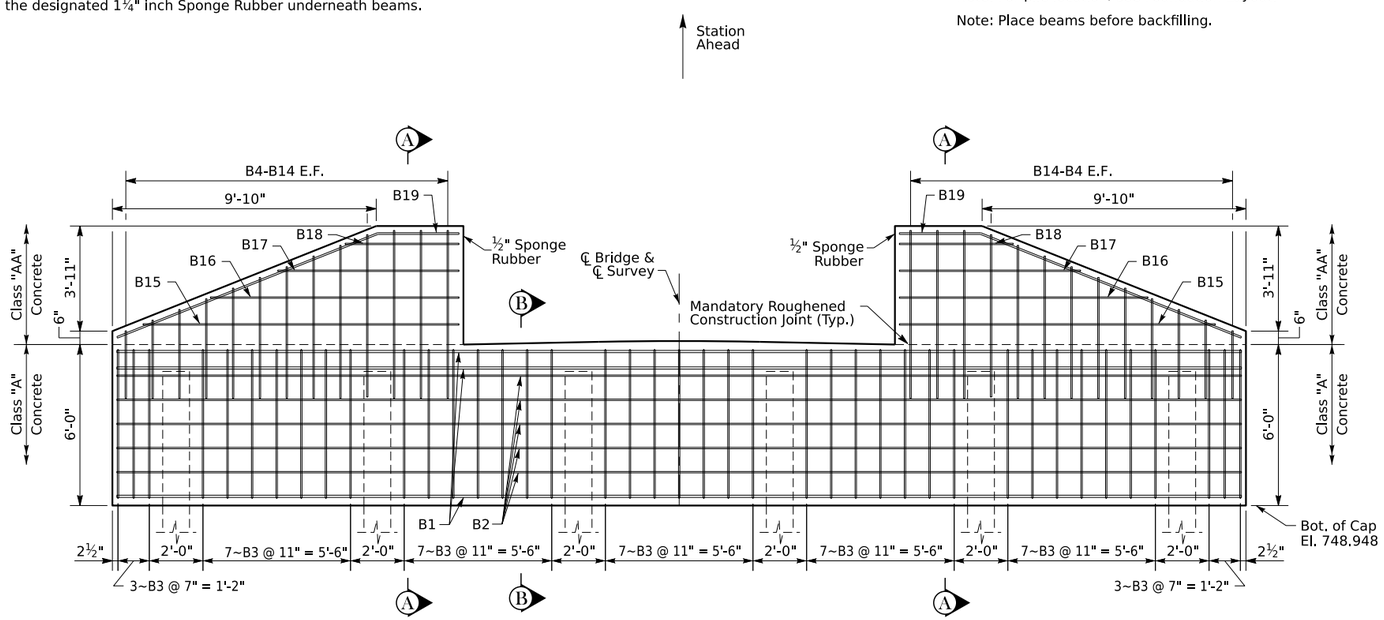

ELEVATION - Showing Cap & Wing Reinforcement

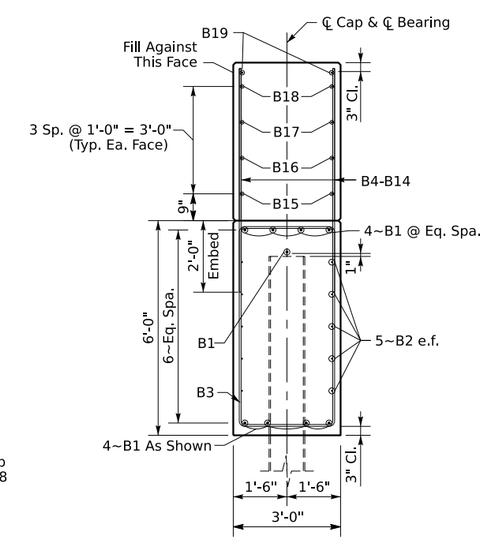

Section A-A

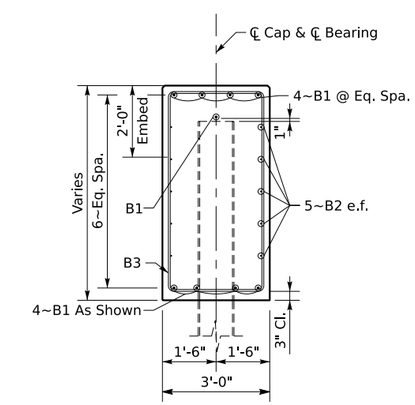

Section B-B

COMMONWEALTH OF KENTUCKY DEPARTMENT OF HIGHWAYS	REVISION / DATE	PREPARED BY Division of Structural Design	DATE: JUNE 2025 / CHECKED BY	INTEGRAL END BENT #2	ROUTE Sturgeon Creek Rd	ITEM NO.	COUNTY OF OWSLEY
			DESIGNED BY: J. VAN ZEE / K. EE	CROSSING Sturgeon Creek		SHEET NO. S7	DRAWING NUMBER 28995
			DETAILED BY: M. BAWITHAWNG / J. VAN ZEE				

MicroStation v10.16.3.31 USER: messiah.bawithawn DATE PLOTTED: 16-JUL-2025 FILE NAME: J:\District10\RSnM\Owsley Sturgeon Creek\Details quantities closeout\28995.dgn

PRECAST PRESTRESSED BOX BEAMS

General Notes

SPECIFICATIONS: *All references to the standard Specifications are to the current edition of the Kentucky Department of Highways Standard Specifications for Road and Bridge Construction, with current supplemental specifications. All references to the AASHTO Specifications are to the current edition of the AASHTO LRFD Bridge Design Specifications, with interims.*

DESIGN LOADS: *Beam sections are designed for 1.25*HL93 (KYHL93) Live Load.*

DESIGN LOAD DISTRIBUTION: *Contrary to AASHTO LRFD Bridge Design Specifications, the design moment and shear distribution for all beams is 0.5 lanes.*

FUTURE WEARING SURFACE: *These beams are designed for a 15 PSF future wearing surface load.*

SUBSTRUCTURE DESIGN LOADS: *Unfactored design reaction forces per beam end.*
DC (kips): Beam, Slab (if applicable), and Type II railing dead loads.
DW (kips): Future wearing surface.
LL (kips): Beam Live Load reaction per lane x Design load distribution.
LL+I (kips): LL with Dynamic load allowance.

DESIGN DEFLECTIONS:
Δd (in.): Sum of the downwards deflections caused by the design 5" deck, railing, and future wearing surface. (Positive Downwards)
Δc (in.): Upwards midspan camber of the beam caused by prestressing minus the downward deflection of the beam due to self weight. (Positive Upwards)

MATERIAL DESIGN SPECIFICATIONS:

for Steel Reinforcement	*FY = 60000 PSI*
for Prestressed Girder Concrete (Typ. U.N.O.)	*F'C = 7000 PSI*
	F'CI = 5500 PSI
for Class "AA" Concrete	*F'C = 4000 PSI*
for Prestressing Steel	*F'S = 270000 PSI*

DESIGN LENGTH: *Beam lengths shown in the Standards represent total beam length. Use the next greater designed section for non-Standard lengths.*

CONSTRUCTION METHOD: *Transferring bond stress to the concrete will not be allowed, nor releasing of end anchors until the concrete has attained a minimum compressive strength of F'CI as shown by standard cylinders made and cured identically with the girders; attain F'C at or prior to 28 days. Apply an initial prestress force of 33817 lbs. per low relaxation strand. Beams with honeycomb of such extent as to affect the strength of resistance to deterioration will not be accepted. The allowance of .0005L (length) is made for shortening of beams due to shrinkage and elastic change. Furnish shop plans showing a detensioning plan by numbering, in sequence, the strand pattern.*

PRESTRESSING STRANDS: *Ensure prestressing strands to be ½" oversize (0.167 sq. in.) uncoated seven-wire stress relieved, low-relaxation strands conforming to AASHTO M 203, Grade 270. If an alternate strand arrangement or strand type is preferred by the Contractor, the designer that developed the original plans will provide the design and also revise the original plans to reflect the changes. These design and plan modifications will be done at the Contractor's expense.*

CORROSION INHIBITOR: *Provide a corrosion inhibitor for B-type (non-composite) beams from the list of approved materials.*

BEVELED EDGES: *Bevel all exposed edges ¾".*

BEAM SEALER: *For composite box beams (CB Beams), seal the full length of the exterior face of all exterior beams with the extent from the top of the beam to 1'-0" underneath the beam. For non-composite box beams (B beams), seal all faces of all beams, except take care to ensure the grout pockets are not sealed. Use an approved silane sealer as specified by the Division of Structural Design.*

REINFORCEMENT: *Dimensions shown from the face of concrete to reinforcement are clear distances. Spacing of reinforcement is from center to center of reinforcement. All steel reinforcement is to be epoxy coated in accordance with Section 811.10 of the Specifications. Consider bars marked "C" to be a stirrup for purposes of bend diameters. Non-epoxy reinforcement may be used for fabrication purposes, only, provided that the steel is not used in the top 5 ½" of the beam and the location of the steel is indicated on the shop drawings.*

FABRICATION: *Beams shall not be fabricated more than 120 days before the deck is to be poured.*

GROUT: *Provide non-shrink grout for anchor dowels, shear keys, and tensioning rod block-outs conforming with Section 601.03.03 of the Specifications. When side by side superstructure is utilized, grouting will be completed after lateral tension rods have been fully tightened and before leveling devices have been removed. Include the cost of furnishing and placing grout in the price of beam.*

~~RAILING SYSTEM TYPE II: *Furnish this material per these specifications.*~~

ITEM	*DESCRIPTION*	*MATERIAL SPECIFICATION*	*COATING SPECIFICATION*
Post	*W6x25*	*ASTM A36 or A572*	*A123*
Channel	*C7x9.8*	*ASTM A36 or A572*	*A123*
Plate	*½"x 7"*	*ASTM A36 or A572*	*A123*
Tubing	*8x4x0.1875*	*ASTM A500 or A501*	*A123*
Bolts	*⅝"*	*ASTM A307*	*A153*
Nuts	*for ⅝"*	*ASTM A563, Grade A or better*	*A153*
Washers	*for ⅝"*	*ASTM A563, Grade A or better*	*A153*
Stud	*1¼"*	*ASTM A108 (1045 C.D. Bar)*	*B633, Type II, Class 25*
Ferrule	*2½"x 5"*	*ASTM A108 (11L17 Steel)*	*B633, Type II, Class 25*
Wire	*⅜"*	*ASTM A510 (1018 Steel)*	*B633, Type II, Class 25*
Nut	*for 1 ¼" Bolt*	*ASTM A108 (12L14 Steel)*	*B633, Type II, Class 25*
Nut	*for 1 ¼" Stud*	*ASTM A325M*	*B633, Type II, Class 25*
Washers	*for 1 ¼" Stud*	*ASTM A325M*	*B633, Type II, Class 25*

Use the current edition of the references listed below with these standards.

STANDARD DRAWINGS

BBP-003 Elastomeric Bearing Pads
~~*BHS-007 Railing System Type II*~~
BJE-001 Armored Edge & Neoprene Joints
~~*RBR-001 Steel Beam Guardrail*~~
RBR-005 Guardrail Components

SPECIAL NOTES

for Corrosion Inhibitors

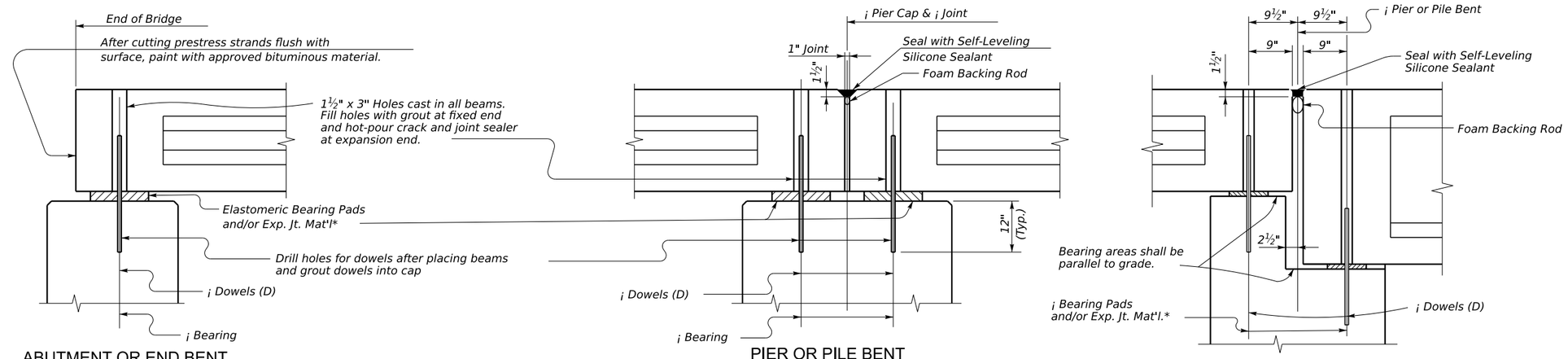

ABUTMENT OR END BENT

PIER OR PILE BENT

STEPPED PIER OR PILE BENT

(Showing Location & Placement of Box Beams)

TYPICAL BEARING DETAILS (NON-COMPOSITE)

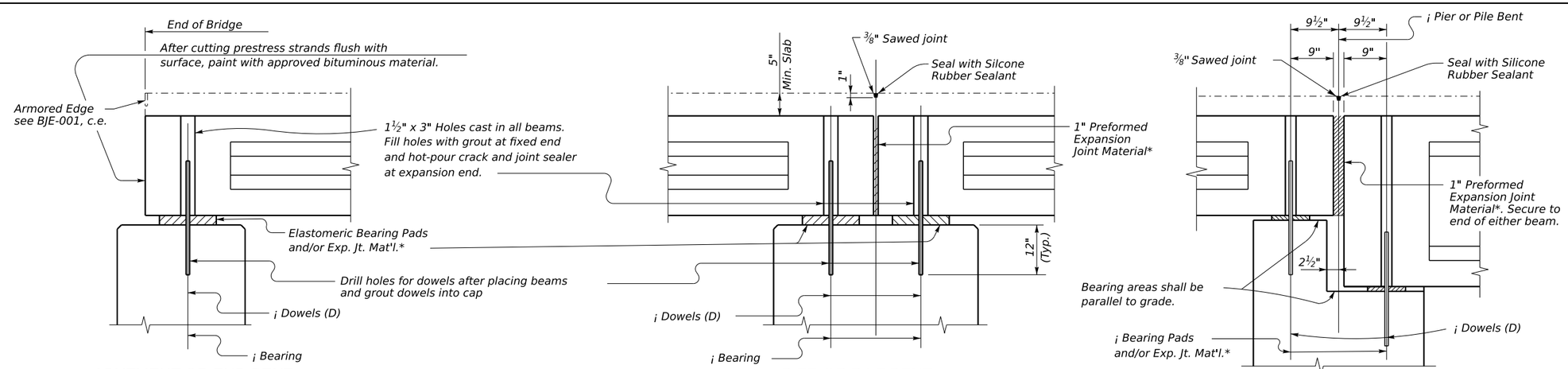

ABUTMENT OR END BENT

PIER OR PILE BENT

STEPPED PIER OR PILE BENT

(Showing Location & Placement of Box Beams)

TYPICAL BEARING DETAILS (COMPOSITE)

*Expansion Joint Material:
AASHTO M153
Type-I Sponge Rubber

** Preformed Neoprene Rubber Sheet:
50 Durometer
AASHTO M251, Grade 3

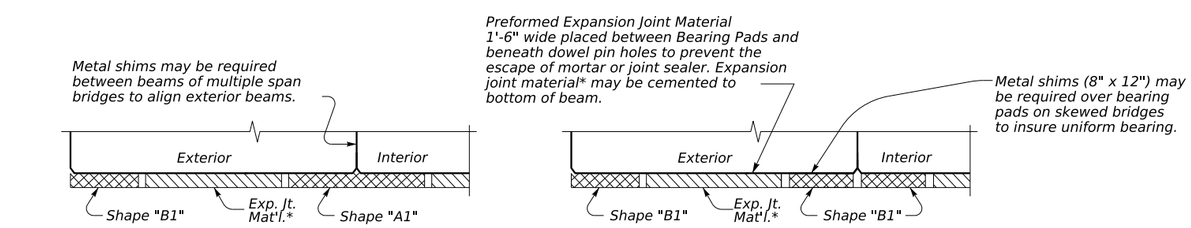

(0°Skew)

(Skewed Spans)

For Elastomeric Bearing Pad Details of Shapes A1 & B1, see Std. Dwg. BBP-003, c.e.

SHOWING PADS FOR BEAM TYPES B27-B42 & CB27-CB42

Use ½" x 1'-6" preformed neoprene rubber sheet** for beam types B12-B21 & CB12-CB21 for bearing.

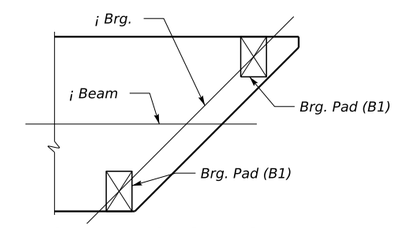

PAD PLACEMENT FOR SKEWS

Pads "B1" are to always be placed perpendicular to ℄ beam with center of pad over ℄ bearing.

GENERAL NOTES

Provide metal shims conforming to ASTM A36 and galvanize in accordance with ASTM A123. As alternates, polymer, or elastomer shims may be used. Include the cost of furnishing and placing these shims in the price per beam.

SUBMITTED _____ DIVISION DIRECTOR — 10/25/2024 DATE

COMMONWEALTH OF KENTUCKY DEPARTMENT OF HIGHWAYS	REVISION	DATE	PREPARED BY Division of Structural Design	DATE: JUNE 2025	CHECKED BY	SEPIA 44-BOX BEAM BEARING DETAILS	ROUTE Sturgeon Creek Rd	ITEM NO.	COUNTY OF OWSLEY
				DESIGNED BY:		CROSSING Sturgeon Creek		SHEET NO. S9	DRAWING NUMBER 28995
				DETAILED BY:	J. VAN ZEE				

MicroStation v10.16.3.31 USER: messiah.bawithawn DATE PLOTTED: 16-JUL-2025 FILE NAME: J:\District10\RSnM\Owsley Sturgeon Creek\Details quantities closeout\28995.dgn

BILL OF REINFORCEMENT

MARK	TYPE	NO.	SIZE	LENGTH	LOCATION
S1e	Str.	98	5	15- 8	Slab
S2e	Str.	36	5	50- 2	Slab Longitudinal

Note: The bridge is designed for 5" slab throughout the length of the bridge.

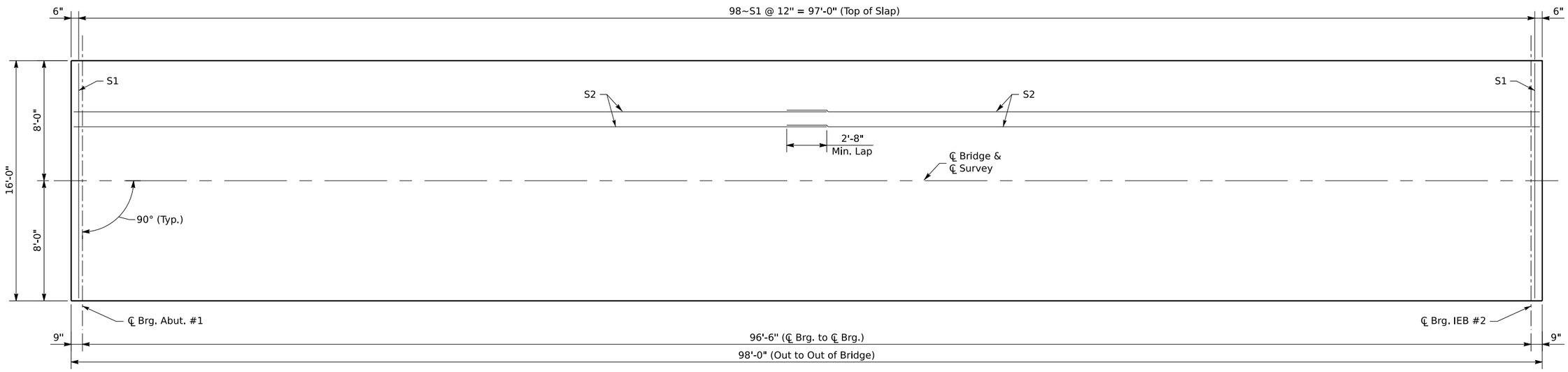

PLAN

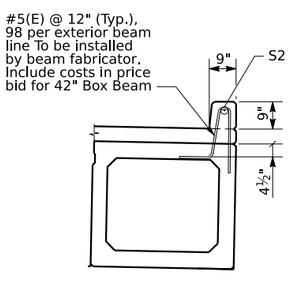

CURB DETAIL

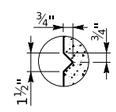

"V-Groove" Rustication

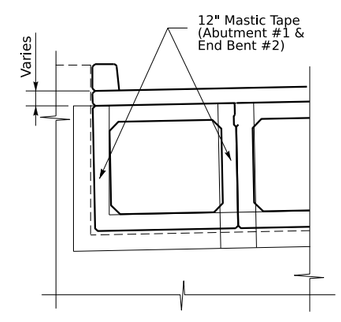

END OF BEAM ELEVATION

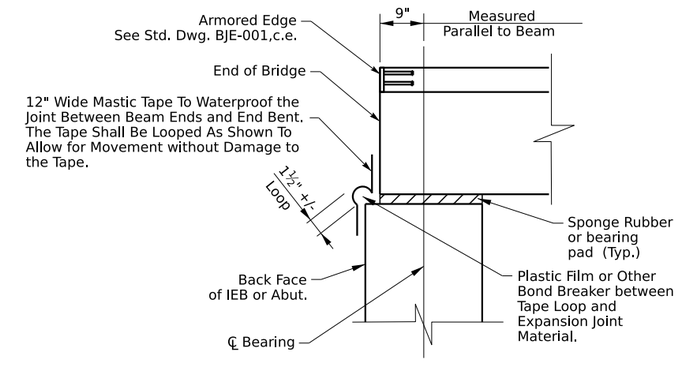

JOINT WATERPROOFING DETAIL

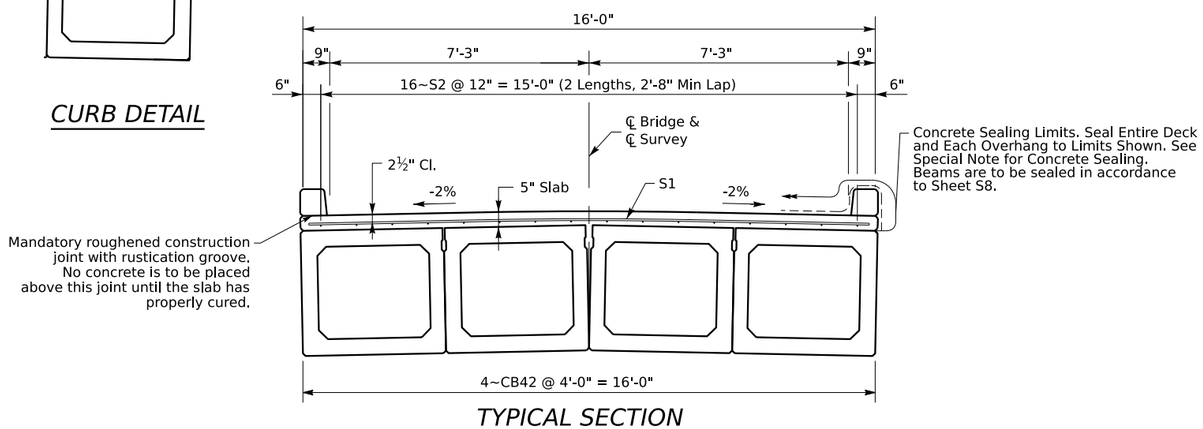

TYPICAL SECTION

GENERAL NOTES

MASTIC TAPE: Mastic Tape used to seal joints is to meet the requirements of ASTM C-877 Type I, II, or III. The joint is to be covered with 12-inch wide mastic tape. Prior to application, the joint surface shall be clean and free of dirt, debris, or deleterious material. Primer, if required by the tape mfgr., shall be applied for a minimum width of nine inches on each side of the joint.

Mastic Tape shall be either:

EZ-WRAP RUBBER by PRESS-SEAL GASKET CORPORATION,
SEAL WRAP by MAR MAC MANUFACTURING CO. INC. ,
CADILLOC by the UP RUBBER CO. INC.
or approved equal.

Mastic Tape shall cover the joint continuously unless otherwise shown in the plans. Mastic Tape shall be spliced by lapping a minimum of six inches and in accordance with the mfgrs. recommendations with the overlap running downhill.

All preformed expansion joint material, caulking, mastic tape, pipe sleeve and equipment and labor necessary to complete the joints are incidental to the square foot bid for Retaining Walls.

CONSTRUCTION ELEVATIONS

LOCATION	LEFT GUTTER			CENTER LINE			RIGHT GUTTER		
	CONSTR. ELEV.	TOP OF BEAM	DIM. "X"	CONSTR.	TOP OF BEAM	DIM. "X"	CONSTR. ELEV.	TOP OF BEAM	DIM. "X"
Skew Line AA	761.363			761.494			761.363		
Skew Line BB	761.345			761.476			761.345		
Skew Line CC	759.009			759.139			759.009		
Skew Line DD	758.990			759.121			758.990		
Grid Line 1	761.250			761.381			761.250		
Grid Line 2	761.072			761.202			761.072		
Grid LIne 3	760.891			761.022			760.891		
Grid Line 4	760.708			760.839			760.708		
Grid Line 5	760.521			760.652			760.521		
Grid Line 6	760.332			760.462			760.332		
Grid LIne 7	760.138			760.269			760.138		
Grid Line 8	759.940			760.071			759.940		
Grid Line 9	759.739			759.870			759.739		
Grid Line 10	759.535			759.666			759.535		
Grid LIne 11	759.328			759.459			759.328		
Grid Line 12	759.120			759.250			759.120		

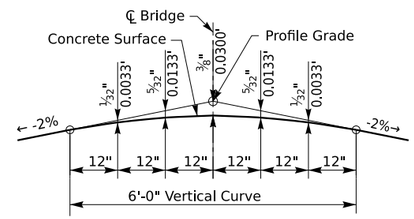

PARABOLIC CROWN

NOTES FOR ELEVATIONS TAKEN ON PRESTRESSED CONCRETE BOX BEAMS

Take elevations on top of beam at points indicated after the beams have been laterally tensioned and grouted. The beam elevations are to be read to three decimal places and entered in tables under "Top of Beam" elevations.

Compute dimension "X" as follows: "Construction Elevation" minus "Top of Beam" elevation equals dimension "X". Construction Elevations include camber due to weight of the concrete slab and barrier. Measuring of dimension "X" gives the final check on beam tolerances for camber, beam damage, and errors in erection that produce reverse cambers, sags, and unsightly fascia beams.

The minimum allowable dimension "X" or slab thickness is 4¾" (0.395') If any computed dimension "X" is less than that, adjustments may need to be made to the dimensions "X" on one or more grid lines.

For setting templates, measure dimension "X" above top of beams for top of template. Do not set template by elevations.

Temporary supports or shoring will not be permitted under the girders when pouring the concrete floor slab or when taking "Top of Beam" elevations.

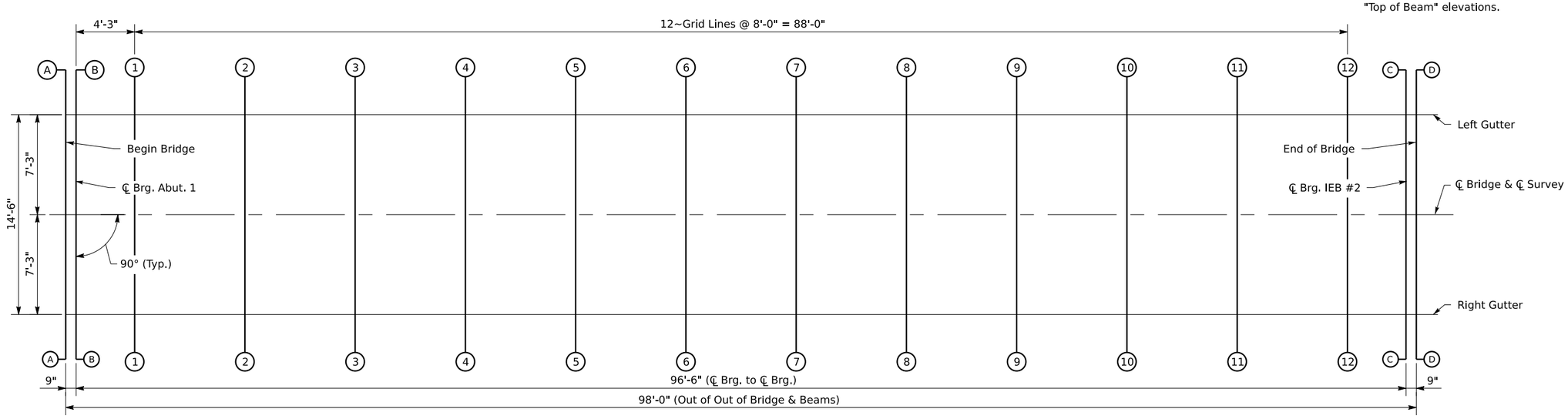

GRID LAYOUT

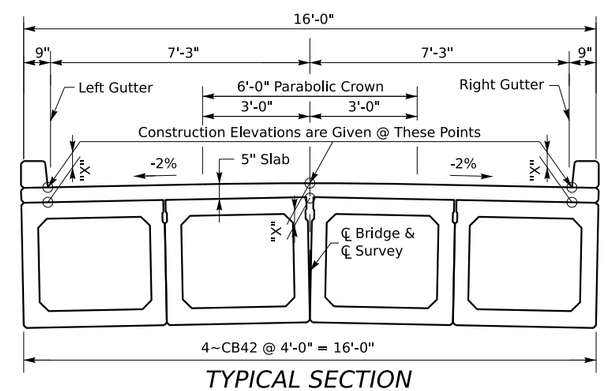

TYPICAL SECTION

COMMONWEALTH OF KENTUCKY
DEPARTMENT OF HIGHWAYS

REVISION	DATE

PREPARED BY
Division of Structural Design

DATE: JUNE 2025	CHECKED BY
DESIGNED BY: J. VAN ZEE	K. EE
DETAILED BY: M. BAWITHAWNG	J. VAN ZEE

CONSTRUCTION ELEVATIONS

CROSSING: Sturgeon Creek

ROUTE: Sturgeon Creek Rd

ITEM NO.

SHEET NO. S11

COUNTY OF: OWSLEY

DRAWING NUMBER 28995

MicroStation v10.16.3.31 USER: messiah.bawithawn DATE PLOTTED: 16-JUL-2025 FILE NAME: J:\District10\RSnM\Owsley Sturgeon Creek\Details quantities closeout\28995.dgn